# UTN

## high pressure fan coils technical manual

GB

## High pressure Fan Coils

## 3 kW - 22 kW

CE

EUROVENT CERTIFIED PERFORMANCE

Galletti
AIR CONDITIONING

INDEX


| | | |
|---|---|---|
| 1 | **Main features** | **pag. 2** |
| 2 | **Versions and components** | **pag. 2** |
| 3 | **POSSIBLE CONFIGURATIONS** | **pag. 3** |
| 4 | **Available options** | **pag. 3** |
| 5 | **Rated technical data** | **pag. 4** |
| 6 | **Ventilation features** | **pagg. 5 / 6** |
| 6.1 | Accessories: air pressure drop | **pagg. 7 / 8** |
| 6.2 | Sound power levels for octave band | **pag. 8** |
| 7 | **Performances** | |
| 7.1 | **Cooling capacity** | **pagg. 9 / 10** |
| 7.2 | **Heating capacity** | **pagg. 11 / 12** |
| 7.3 | **DF coil heating capacity** | **pag. 13** |
| 8 | **Installation suggestions** | **pag.15** |
| 9 | **Dimensional data** | **pagg. 16 / 17** |
| 10 | **Wiring diagrams** | **pagg. 18 / 22** |
| 10.1 | Motors electrical data | **pag. 23** |
| 11 | **Accessories** | **pagg. 23 / 26** |
| 12 | **Maintenance** | **pag. 27** |


## OPERATING LIMITS

Thermal carrier: water
Water temperature: + 5°C to +95°C
Air temperature: -20°C to + 43°C
Power supply voltage: 230 V +/-10 %
Max. pressure of primary fluid: 10 bar

## 1 MEAN FEATURES

The new range of UTN high pressure fan coils units has been designed for conditioning rooms that require the installation of ducted units.
Proposed in 14 models with air flows from 600 to 4000 $m^3/h$, the UTN units are characterized by a wide applicative flexibility thanks to the special constructive solutions.

> possibility of installation both in horizontal and vertical position thanks to the special conformation of the condensate discharge system;
> the air intake direction may be modified during installation;
> reduced height (280 mm up to model 16A);
> pre-shared element for the recycle of external air, standard on all models (Φ 100 mm);
> wide range of accessories for effectively.

## 2 VERSIONS AND COMPONENTS

Versions

UTN air handling unit setup for 2-pipe systems
UTNDF air handling unit setup for 4-pipe systems (2 heat exchangers)

N.B. both version may be manufactured, on request, with pre-painted panels.

Components

> Load-bearing structure made of galvanized steel sheet of suitable thickness, duly insulated with noise-proof/anticondensing material, self-estinguishing in Class 1; the insulating material is characterized by a thickness of 10 mm and a density of 90 $Kg/m^3$.
The unit is completed by the following:
- inspections panels;
- setup for external air intake;
- fast-coupling slots.
> Dual intake centrifugal fans made of alluminium, with statically and dinamically balanced impellers, coupled directly to the electric motor.
> 3 speed electric motor, equipped with permanently fit condenser and thermal safety device, installed on vibrator damping supports.
> Heat exchanger: high efficiency, made of copper tube and alluminium fins secured to the tubes by mechanical expansion. It is fitted with brass manifolds and air valves. The heat exchanger, normally supplied with left hand attachments, may be turned by 180°.
> System for collecting and discharging condensate setup either for horizontal or vertical installation.
> Terminal strip for fast - on electrical connections.

The technical and dimensional data indicated in this catalogue are subject to modifications in the view of the improvement of the product.



All copying, even partial, of this manual is strictly forbidden

## 3 POSSIBLE CONFIGURATIONS

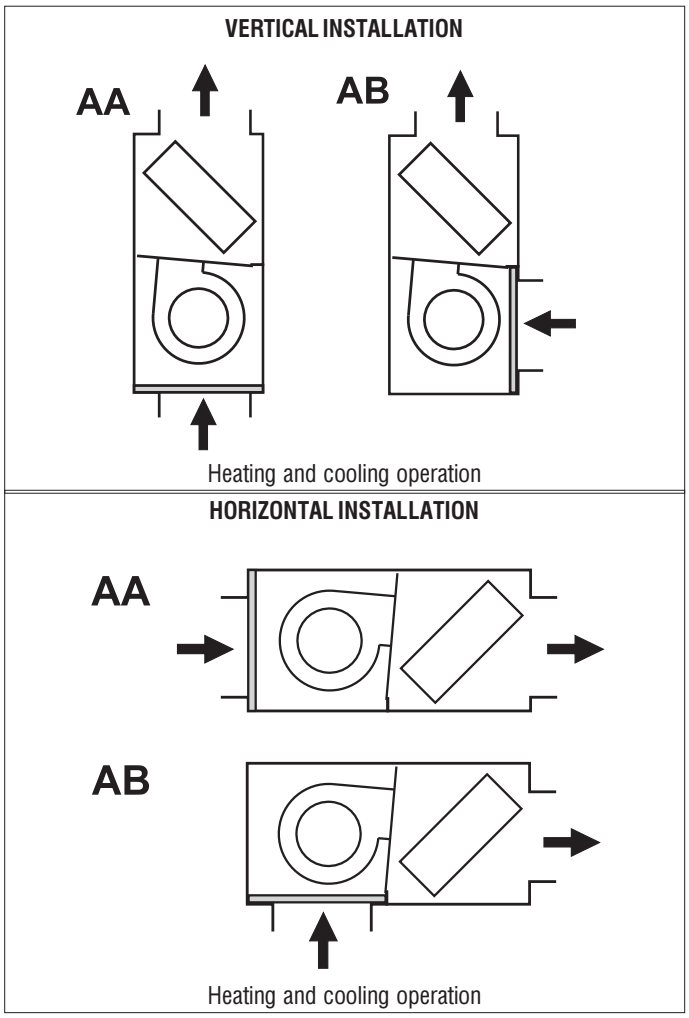


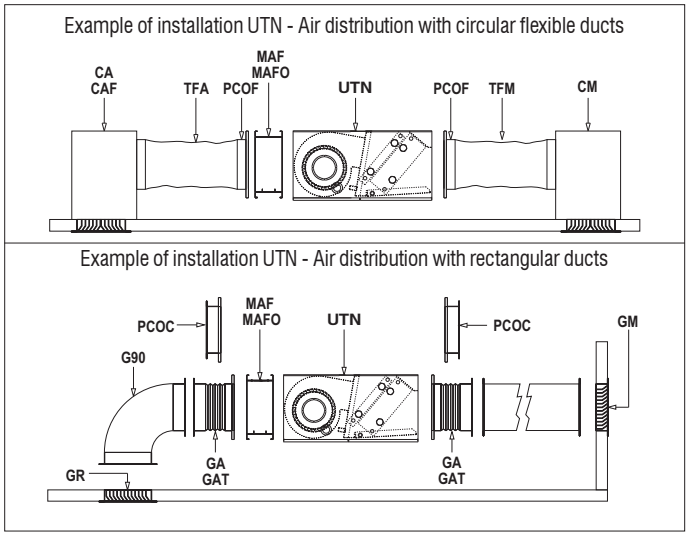


## 4 AVAILABLE OPTIONS

The wide and complete range of accessories completes the UTN air handling units as far as operation is concerned, adapting these units to any plant-engineering requirements, from the solution with rectangular section channels to the one with round flexible ducts.
The standard machines are supplied without control panel and without air filter.

| | |
|---|---|
| | **CONTROL PANELS AND THERMOSTATS** |
| **CD** | Flush wall-mounted speed selector |
| **CDE** | Wall-mounted speed selector |
| **TD** | Wall-mounted control with speed selector, electromechanical thermostat and summer/winter selector |
| **TDC** | Wall-mounted control with speed selector and electromechanical thermostat |
| **TD4T** | Wall-mounted control with speed selector, electromechanical thermostat and summer winter selector for 2/4 pipe systems with valves |
| **MCB** | Wall-mounted microprocessor control - GALLETTI model MYCOMFORT BASE |
| **MCM** | Wall-mounted microprocessor control - GALLETTI model MYCOMFORT MEDIUM |
| **MCL** | Wall-mounted microprocessor control - GALLETTI model MYCOMFORT LARGE |
| **LED503** | Recess wall-mounted microprocessor control |
| **MCSWE** | Water probe for microprocessor controls model MYCOMFORT BASE,MEDIUM, LARGE and LED503. |
| **MCSUE** | Humidity sensor for on-board microprocessor controls model MYCOMFORT MEDIUM and MYCOMFORT LARGE. |
| **TC** | Fan stop thermostat: electromechanical thermostat for minimum water temperature during heating mode |
| **IPM** | Power interface for MYCOMFORT and LED503 |
| **TA** | Electromechanical room thermostat |
| **TA2** | Electromechanical room thermostat with summer/winter selection |
| **CSD** | Wall-mounted control for proportional opening and closing of the motor driven air intake louver |
| | **AIR SUCTION MODULES WITH FILTERS** |
| **MAF** | Air suction module with flat filter G2 |
| **MAFO** | Air suction module with waved filter G4 |
| | **CONNECTION PANELS** |
| **PCOC** | Connecting panel to rectangular ducts |
| **PCOF** | Connecting panel to flexible ducts $\phi$ 200 |
| | **3-WAY VALVES AND DRIP TRAYS** |
| **V** | 3 way valve (possibility of motor driven) |
| **M** | Electrothermal motor for motor driven valve |
| **R** | Hydraulic connection mounting kit |
| **VRCV** | Auxiliary drip tray for vertical installation units |
| **VRCH** | Auxiliary drip tray for horizontal installation units |
| **KSC** | Condensate removal kit |
| | **HOT WATER POST HEATING COIL** |
| **BP** | Hot water post heating coil module |
| | **ELECTRIC HEATERS** |
| **RE** | Electric heater, with safety thermostat and power relay |
| | **MOTOR DRIVEN FRESH AIR INTAKE LOUVER** |
| **PA90** | Motor driven fresh air intake louver |
| | **VIBRATION DAMPERS** |
| **GA** | PVC vibration damper |
| **GAT** | Silicone cloth heat proof vibration dampers |
| | **FLEXIBLE DUCTS - CAPS** |
| **TFA** | Not insulated flexible ducts, $\phi$ 200 |
| **TFM** | Insulated flexible ducts, $\phi$ 200 |
| **TP** | Plastic caps $\phi$ 200 |
| | **AIR INLET AND OUTLET PLENUM BOX** |
| **CA** | Air inlet plenum box with double row grille |
| **CAF** | Air inlet plenum box with double row grille and filter G2 |
| **CM** | Insulated air outlet plenum box with 2 way grille |
| | **AIR INLET AND OUTLET GRILLES** |
| **GM** | Aluminium air outlet grille with counterframe |
| **GR** | Air suction aluminium grille with counterframe |


All copying, even partial, of this manual is strictly forbidden

## 5 RATED TECHNICAL DATA

| UTN | Fan speed | | 0 6 | 06A | 0 8 | 08A | 12 | 12A | 16 | 16A | 22 | 22A | 30 | 30A | 40 | 40A |
|---|---|---|---|---|---|---|---|---|---|---|---|---|---|---|---|---|
| Air flow | High | $m^3/h$ | 600 | 600 | 800 | 800 | 1250 | 1250 | 1600 | 1600 | 2200 | 2200 | 3000 | 3000 | 4000 | 4000 |
| Available static pressure | High | Pa | 80 | 75 | 90 | 85 | 88 | 82 | 100 | 95 | 130 | 110 | 185 | 175 | 156 | 146 |
| Total cooling capacity | | kW | 3,14 | 3,79 | 3,90 | 4,80 | 6,20 | 7,00 | 7,80 | 8,82 | 11,90 | 13,70 | 16,40 | 18,30 | 19,26 | 22,01 |
| Sensible cooling capacity | | kW | 2,45 | 2,87 | 3,08 | 3,71 | 4,65 | 5,36 | 6,52 | 7,16 | 9,36 | 10,50 | 12,80 | 14,10 | 15,50 | 17,57 |
| Water flow | | l/h | 540 | 650 | 669 | 824 | 1064 | 1201 | 1339 | 1514 | 2042 | 2367 | 2833 | 3140 | 3305 | 3777 |
| Water pressure drop | | kPa | 12 | 10 | 17 | 15 | 24 | 20 | 24 | 16 | 26 | 22 | 34 | 45 | 23 | 23 |
| Heating capacity | High | kW | 6,70 | 7,90 | 8,20 | 9,86 | 13,08 | 15,08 | 15,92 | 18,23 | 24,40 | 27,50 | 33,35 | 36,81 | 41,30 | 46,18 |
| Water flow | | l/h | 588 | 693 | 720 | 865 | 1147 | 1323 | 1397 | 1600 | 2141 | 2413 | 2925 | 3231 | 3623 | 4053 |
| Water pressure drop | | kPa | 10 | 8 | 15 | 12 | 21 | 18 | 20 | 13 | 21 | 18 | 27 | 36 | 24 | 24 |
| DF heating capacity (4 pipes) | High | kW | 3,92 | 3,92 | 4,49 | 4,49 | 6,62 | 6,62 | 9,21 | 9,21 | 15,86 | 15,86 | 21,15 | 21,15 | 24,29 | 24,29 |
| Water flow | | l/h | 344 | 344 | 394 | 394 | 581 | 581 | 808 | 808 | 1392 | 1392 | 1856 | 1856 | 2131 | 2131 |
| Water pressure drop | | kPa | 7 | 7 | 9 | 9 | 15 | 15 | 13 | 13 | 12 | 12 | 16 | 16 | 15 | 15 |
| Standard heat exchanger - rows | | n° | 3 | 4 | 3 | 4 | 3 | 4 | 3 | 4 | 3 | 4 | 4 | 5 | 4 | 5 |
| Standard heat exchanger - hydraulic connections | | in | 3/4" | 3/4" | 3/4" | 3/4" | 3/4" | 3/4" | 3/4" | 3/4" | 1" | 1" | 1" | 1" | 1" | 1'' |
| Standard heat exchanger - water content | | l | 1,06 | 1,41 | 1,06 | 1,41 | 1,42 | 1,90 | 1,79 | 2,38 | 2,50 | 3,34 | 4,02 | 5,03 | 4,70 | 5,88 |
| DF heat exchanger - rows | | n° | 1 | 1 | 1 | 1 | 1 | 1 | 1 | 1 | 2 | 2 | 2 | 2 | 2 | 2 |
| DF heat exchanger - hydraulic connection | | in | 3/4" | 3/4" | 3/4" | 3/4" | 3/4" | 3/4" | 3/4" | 3/4" | 1" | 1" | 1" | 1" | 1'' | 1'' |
| DF heat exchanger - water content | | l | 0,35 | 0,35 | 0,47 | 0,47 | 0,59 | 0,59 | 1,42 | 1,42 | 1,42 | 1,42 | 1,72 | 1,72 | 2,01 | 2,01 |
| Power supply | | V/ph/Hz | 230 / 1 / 50 | | | | | | | | | | | | | |
| Maximum current absorption | | A | 0,718 | 0,718 | 0,954 | 0,954 | 1,575 | 1,575 | 1,971 | 1,971 | 3,210 | 3,210 | 5,370 | 5,370 | 5,556 | 5,556 |
| Maximum power input | | W | 175 | 175 | 234 | 234 | 349 | 349 | 443 | 443 | 714 | 714 | 1197 | 1197 | 1150 | 1150 |
| Sound power | | dB(A) | 63 | 63 | 66 | 66 | 69 | 69 | 72 | 72 | 74 | 74 | 78 | 78 | 79 | 79 |
| Sound power - air outlet component | | dB(A) | 59,3 | 59,3 | 62,5 | 62,5 | 65,2 | 65,2 | 68,9 | 68,9 | 70,7 | 70,7 | 74,5 | 74,5 | 75,4 | 75,4 |
| Sound power - transmitted component | | dB(A) | 54,7 | 54,7 | 58,0 | 58,0 | 60,3 | 60,3 | 64,0 | 64,0 | 65,7 | 65,7 | 69,4 | 69,4 | 70,4 | 70,4 |
| Sound power - air inlet component | | dB(A) | 59,3 | 59,3 | 62,5 | 62,5 | 65,2 | 65,2 | 68,9 | 68,9 | 70,7 | 70,7 | 74,5 | 74,5 | 75,4 | 75,4 |
| Weight 2 pipe models (UTN) | | Kg | 31,5 | 32,5 | 32,5 | 33,3 | 40,6 | 41,7 | 47,3 | 48,7 | 65,3 | 67,2 | 77,0 | 79,5 | 84,0 | 87,0 |
| Weight 4 pipe models (UTN DF) | | Kg | 33,7 | 34,7 | 34,7 | 35,5 | 43,2 | 44,3 | 50,3 | 51,7 | 70,9 | 72,8 | 83,4 | 85,9 | 92,0 | 98,5 |

The aforesaid performance is related to the following conditions.

**Air flow:**
- related to the rated usable static pressure, at max. speed

**Cooling:**
- rated air flow
- water inlet temperature 7°C
- water outlet temperature 12°C
- air temperature with dry bulb 27°C
- air temperature with moist bulb 19°C (47% relative humidity)

**Heating:**
- rated air flow
- water inlet temperature 80°C
- water outlet temperature 70°C
- air temperature 20°C

Sound power read conforming to EN 23741 and EN 23742.



All copying, even partial, of this manual is strictly forbidden

## 6 VENTILATION FEATURES

**Legend:**
**Psu** Available static pressure
**Qa** Air flow

**Vr** Fan speed:
**3**= high
**2**= medium
**1**= low

| UTN | Vr | Qa | Psu [Pa] 0 | 10 | 20 | 30 | 40 | 50 | 60 | 70 | 80 | 90 | 100 | 110 | 120 | 130 | 140 | 150 | 160 | 170 | 180 | 200 | 220 | 240 |
|---|---|---|---|---|---|---|---|---|---|---|---|---|---|---|---|---|---|---|---|---|---|---|---|---|
| UTN 06 | 3 | m³/h | 782 | 762 | 742 | 721 | 699 | 676 | 652 | 627 | 600 | 571 | 540 | 506 | 467 | 422 | 367 | 282 | - | - | - | - | - | - |
| | 2 | m³/h | 592 | 573 | 554 | 534 | 512 | 490 | 467 | 442 | 415 | 385 | 353 | 316 | 271 | 213 | - | - | - | - | - | - | - | - |
| | 1 | m³/h | 426 | 405 | 382 | 359 | 335 | 309 | 282 | 253 | 222 | 189 | 152 | 110 | - | - | - | - | - | - | - | - | - | - |
| UTN 06A | 3 | m³/h | 768 | 749 | 728 | 708 | 686 | 663 | 639 | 614 | 587 | 558 | 527 | 492 | 454 | 408 | 352 | 261 | - | - | - | - | - | - |
| | 2 | m³/h | 583 | 564 | 545 | 525 | 504 | 482 | 459 | 434 | 407 | 378 | 346 | 309 | 265 | 206 | - | - | - | - | - | - | - | - |
| | 1 | m³/h | 422 | 401 | 378 | 355 | 331 | 305 | 279 | 250 | 219 | 186 | 150 | 109 | - | - | - | - | - | - | - | - | - | - |
| UTN 08 | 3 | m³/h | 1002 | 982 | 963 | 942 | 921 | 899 | 876 | 851 | 826 | 799 | 771 | 740 | 707 | 671 | 629 | 581 | - | - | - | - | - | - |
| | 2 | m³/h | 850 | 831 | 811 | 791 | 769 | 747 | 724 | 699 | 673 | 645 | 615 | 582 | 545 | 502 | 448 | 369 | 519 | 411 | - | - | - | - |
| | 1 | m³/h | 597 | 583 | 569 | 553 | 537 | 520 | 502 | 483 | 462 | 439 | 413 | 383 | 345 | - | - | - | - | - | - | - | - | - |
| UTN 08A | 3 | m³/h | 981 | 963 | 944 | 924 | 904 | 883 | 861 | 838 | 813 | 787 | 760 | 730 | 698 | 661 | 620 | 570 | 500 | - | - | - | - | - |
| | 2 | m³/h | 836 | 818 | 798 | 779 | 758 | 736 | 714 | 689 | 664 | 637 | 607 | 574 | 537 | 493 | 437 | 338 | - | - | - | - | - | - |
| | 1 | m³/h | 596 | 582 | 568 | 552 | 536 | 519 | 501 | 482 | 461 | 438 | 412 | 381 | 343 | - | - | - | - | - | - | - | - | - |
| UTN 12 | 3 | m³/h | 1840 | 1783 | 1725 | 1664 | 1601 | 1535 | 1466 | 1393 | 1316 | 1233 | 1144 | 1046 | 937 | 812 | 658 | 438 | - | - | - | - | - | - |
| | 2 | m³/h | 1537 | 1491 | 1444 | 1395 | 1343 | 1290 | 1233 | 1174 | 1110 | 1043 | 969 | 888 | 797 | 690 | 555 | 332 | - | - | - | - | - | - |
| | 1 | m³/h | 1284 | 1246 | 1207 | 1166 | 1124 | 1080 | 1033 | 983 | 931 | 874 | 812 | 744 | 666 | 573 | 450 | - | - | - | - | - | - | - |
| UTN 12A | 3 | m³/h | 1787 | 1731 | 1673 | 1613 | 1551 | 1486 | 1417 | 1346 | 1269 | 1188 | 1100 | 1004 | 897 | 774 | 623 | 413 | - | - | - | - | - | - |
| | 2 | m³/h | 1505 | 1459 | 1412 | 1362 | 1311 | 1257 | 1200 | 1141 | 1077 | 1009 | 935 | 853 | 761 | 653 | 515 | - | - | - | - | - | - | - |
| | 1 | m³/h | 1259 | 1222 | 1183 | 1143 | 1101 | 1057 | 1011 | 962 | 910 | 854 | 793 | 725 | 647 | 555 | 431 | - | - | - | - | - | - | - |
| UTN 16 | 3 | m³/h | 2359 | 2296 | 2231 | 2164 | 2094 | 2021 | 1946 | 1866 | 1782 | 1693 | 1599 | 1496 | 1385 | 1260 | 1116 | 942 | 698 | - | - | - | - | - |
| | 2 | m³/h | 1834 | 1782 | 1728 | 1672 | 1614 | 1553 | 1489 | 1422 | 1351 | 1274 | 1191 | 1101 | 999 | 881 | 734 | 515 | - | - | - | - | - | - |
| | 1 | m³/h | 1495 | 1451 | 1405 | 1358 | 1308 | 1256 | 1201 | 1143 | 1081 | 1015 | 942 | 862 | 770 | 661 | 515 | - | - | - | - | - | - | - |
| UTN 16A | 3 | m³/h | 2304 | 2242 | 2178 | 2112 | 2043 | 1972 | 1897 | 1819 | 1737 | 1650 | 1557 | 1457 | 1348 | 1227 | 1088 | 921 | 694 | - | - | - | - | - |
| | 2 | m³/h | 1819 | 1767 | 1713 | 1657 | 1599 | 1538 | 1474 | 1407 | 1335 | 1259 | 1176 | 1085 | 982 | 863 | 715 | 490 | - | - | - | - | - | - |
| | 1 | m³/h | 1487 | 1443 | 1397 | 1349 | 1299 | 1247 | 1192 | 1134 | 1072 | 1006 | 933 | 852 | 760 | 650 | 503 | - | - | - | - | - | - | - |
| UTN 22 | 3 | m³/h | 3369 | 3299 | 3227 | 3153 | 3077 | 2998 | 2915 | 2830 | 2740 | 2646 | 2547 | 2441 | 2328 | 2206 | 2070 | 1918 | 854 | 1516 | 1152 | - | - | - |
| | 2 | m³/h | 2425 | 2365 | 2302 | 2237 | 2170 | 2101 | 2028 | 1952 | 1872 | 1787 | 1696 | 1599 | 1492 | 1374 | 1238 | 1075 | - | - | - | - | - | - |
| | 1 | m³/h | 1747 | 1696 | 1645 | 1591 | 1535 | 1476 | 1415 | 1350 | 1282 | 1209 | 1130 | 1044 | 949 | 840 | 708 | 527 | - | - | - | - | - | - |
| UTN 22A | 3 | m³/h | 3114 | 3047 | 2977 | 2905 | 2831 | 2753 | 2673 | 2589 | 2501 | 2408 | 2310 | 2205 | 2092 | 1967 | 1829 | 1670 | 1475 | 1200 | - | - | - | - |
| | 2 | m³/h | 2317 | 2258 | 2198 | 2135 | 2070 | 2002 | 1932 | 1858 | 1780 | 1698 | 1610 | 1515 | 1411 | 1296 | 1164 | 1003 | 782 | - | - | - | - | - |
| | 1 | m³/h | 1695 | 1646 | 1595 | 1542 | 1487 | 1430 | 1370 | 1307 | 1240 | 1168 | 1091 | 1007 | 913 | 806 | 676 | 498 | - | - | - | - | - | - |
| UTN 30 | 3 | m³/h | 3532 | 3506 | 3480 | 3454 | 3427 | 3400 | 3373 | 3346 | 3318 | 3290 | 3261 | 3232 | 3203 | 3173 | 3143 | 3112 | 3081 | 3050 | 3018 | 2952 | 2883 | 2813 |
| | 2 | m³/h | 2876 | 2849 | 2822 | 2795 | 2767 | 2739 | 2710 | 2681 | 2651 | 2621 | 2591 | 2559 | 2528 | 2495 | 2462 | 2428 | 2394 | 2358 | 2322 | 2246 | 2167 | 2081 |
| | 1 | m³/h | 2232 | 2207 | 2182 | 2157 | 2131 | 2105 | 2078 | 2051 | 2023 | 1994 | 1965 | 1935 | 1905 | 1874 | 1841 | 1808 | 1774 | 1739 | 1702 | 1625 | 1541 | 1447 |
| UTN 30A | 3 | m³/h | 3500 | 3474 | 3448 | 3422 | 3395 | 3368 | 3341 | 3313 | 3285 | 3257 | 3228 | 3199 | 3170 | 3140 | 3110 | 3079 | 3048 | 3016 | 2983 | 2917 | 2848 | 2777 |
| | 2 | m³/h | 2837 | 2810 | 2783 | 2756 | 2728 | 2700 | 2671 | 2642 | 2613 | 2582 | 2552 | 2521 | 2489 | 2456 | 2423 | 2389 | 2355 | 2319 | 2283 | 2207 | 2127 | 2042 |
| | 1 | m³/h | 2217 | 2192 | 2167 | 2141 | 2115 | 2088 | 2060 | 2033 | 2004 | 1975 | 1945 | 1915 | 1883 | 1851 | 1818 | 1784 | 1749 | 1713 | 1675 | 1596 | 1508 | 1411 |
| UTN 40 | 3 | m³/h | 6011 | 5905 | 5796 | 5686 | 5572 | 5456 | 5337 | 5216 | 5091 | 4962 | 4829 | 4692 | 4551 | 4404 | 4252 | 4093 | 3926 | 3750 | 3565 | 3154 | 2663 | 2015 |
| | 2 | m³/h | 4694 | 4599 | 4502 | 4403 | 4302 | 4198 | 4092 | 3983 | 3872 | 3757 | 3639 | 3517 | 3391 | 3260 | 3124 | 2983 | 2835 | 2679 | 2515 | 2152 | 1722 | 1163 |
| | 1 | m³/h | 3795 | 3705 | 3613 | 3520 | 3424 | 3326 | 3226 | 3123 | 3017 | 2909 | 2797 | 2682 | 2562 | 2439 | 2310 | 2176 | 2036 | 1889 | 1733 | 1389 | 980 | - |
| UTN 40A | 3 | m³/h | 5786 | 5683 | 5579 | 5471 | 5362 | 5250 | 5135 | 5017 | 4896 | 4772 | 4644 | 4512 | 4375 | 4233 | 4085 | 3932 | 3770 | 3601 | 3421 | 3023 | 2549 | 1920 |
| | 2 | m³/h | 4575 | 4482 | 4387 | 4290 | 4190 | 4089 | 3984 | 3878 | 3768 | 3656 | 3540 | 3420 | 3296 | 3168 | 3035 | 2896 | 2750 | 2597 | 2436 | 2079 | 1665 | 1104 |
| | 1 | m³/h | 3717 | 3630 | 3540 | 3449 | 3355 | 3260 | 3162 | 3061 | 2958 | 2852 | 2743 | 2631 | 2514 | 2393 | 2268 | 2137 | 2000 | 1856 | 1704 | 1367 | 967 | - |


All copying, even partial, of this manual is strictly forbidden

## 6 VENTILATION FEATURES

**Legend:**
**Psu** Available static pressure
**Qa** Air flow

**Vr** Fan speed:
**3**= high
**2**= medium
**1**= low

| UTN | Vr | Qa | Psu [Pa] 0 | 10 | 20 | 30 | 40 | 50 | 60 | 70 | 80 | 90 | 100 | 110 | 120 | 130 | 140 | 150 | 160 | 170 | 180 | 200 | 220 | 240 |
|---|---|---|---|---|---|---|---|---|---|---|---|---|---|---|---|---|---|---|---|---|---|---|---|---|
| UTN 06 DF | 3 | m³/h | 776 | 756 | 736 | 715 | 693 | 670 | 646 | 621 | 594 | 566 | 534 | 500 | 462 | 417 | 361 | 276 | - | - | - | - | - | - |
| | 2 | m³/h | 588 | 570 | 550 | 530 | 509 | 487 | 464 | 439 | 412 | 383 | 350 | 313 | 269 | 210 | - | - | - | - | - | - | - | - |
| | 1 | m³/h | 424 | 403 | 380 | 357 | 333 | 307 | 280 | 252 | 221 | 188 | 151 | 110 | - | - | - | - | - | - | - | - | - | - |
| UTN 06 ADF | 3 | m³/h | 762 | 743 | 723 | 702 | 680 | 657 | 633 | 608 | 581 | 553 | 521 | 487 | 449 | 403 | 347 | 255 | - | - | - | - | - | - |
| | 2 | m³/h | 579 | 561 | 542 | 522 | 501 | 479 | 456 | 431 | 404 | 375 | 343 | 306 | 262 | 204 | - | - | - | - | - | - | - | - |
| | 1 | m³/h | 420 | 399 | 376 | 353 | 329 | 304 | 277 | 249 | 218 | 185 | 149 | 108 | - | - | - | - | - | - | - | - | - | - |
| UTN 08 DF | 3 | m³/h | 992 | 973 | 953 | 932 | 911 | 889 | 866 | 842 | 817 | 790 | 761 | 731 | 698 | 661 | 620 | 571 | 508 | 388 | - | - | - | - |
| | 2 | m³/h | 843 | 824 | 804 | 784 | 762 | 740 | 717 | 692 | 666 | 638 | 608 | 575 | 538 | 495 | 441 | 360 | - | - | - | - | - | - |
| | 1 | m³/h | 595 | 581 | 566 | 551 | 535 | 518 | 500 | 480 | 459 | 436 | 410 | 380 | 342 | - | - | - | - | - | - | - | - | - |
| UTN 08 ADF | 3 | m³/h | 973 | 954 | 935 | 916 | 895 | 874 | 852 | 829 | 804 | 779 | 751 | 721 | 688 | 652 | 610 | 559 | 487 | - | - | - | - | - |
| | 2 | m³/h | 829 | 811 | 792 | 772 | 751 | 730 | 707 | 683 | 657 | 630 | 600 | 567 | 530 | 486 | 430 | 323 | - | - | - | - | - | - |
| | 1 | m³/h | 594 | 579 | 565 | 550 | 533 | 516 | 498 | 479 | 458 | 435 | 409 | 378 | 340 | - | - | - | - | - | - | - | - | - |
| UTN 12 DF | 3 | m³/h | 1790 | 1734 | 1677 | 1618 | 1556 | 1491 | 1423 | 1352 | 1277 | 1196 | 1109 | 1013 | 907 | 784 | 633 | 419 | - | - | - | - | - | - |
| | 2 | m³/h | 1507 | 1462 | 1415 | 1367 | 1316 | 1263 | 1208 | 1149 | 1087 | 1020 | 947 | 867 | 777 | 672 | 538 | - | - | - | - | - | - | - |
| | 1 | m³/h | 1266 | 1229 | 1190 | 1150 | 1108 | 1064 | 1017 | 968 | 916 | 860 | 799 | 731 | 654 | 561 | 439 | - | - | - | - | - | - | - |
| UTN 12 ADF | 3 | m³/h | 1740 | 1685 | 1629 | 1570 | 1509 | 1445 | 1378 | 1308 | 1233 | 1153 | 1068 | 974 | 869 | 748 | 602 | 397 | - | - | - | - | - | - |
| | 2 | m³/h | 1477 | 1431 | 1384 | 1336 | 1285 | 1232 | 1176 | 1117 | 1054 | 987 | 914 | 834 | 743 | 636 | 500 | - | - | - | - | - | - | - |
| | 1 | m³/h | 1242 | 1205 | 1167 | 1127 | 1086 | 1042 | 996 | 948 | 896 | 840 | 780 | 712 | 636 | 544 | 421 | - | - | - | - | - | - | - |
| UTN 16 DF | 3 | m³/h | 2301 | 2239 | 2175 | 2108 | 2040 | 1968 | 1894 | 1815 | 1733 | 1646 | 1553 | 1452 | 1342 | 1219 | 1078 | 906 | 665 | - | - | - | - | - |
| | 2 | m³/h | 1803 | 1751 | 1698 | 1643 | 1585 | 1525 | 1462 | 1395 | 1325 | 1249 | 1167 | 1078 | 977 | 860 | 714 | 496 | - | - | - | - | - | - |
| | 1 | m³/h | 1477 | 1433 | 1388 | 1340 | 1291 | 1239 | 1185 | 1127 | 1066 | 1000 | 928 | 849 | 758 | 649 | 504 | - | - | - | - | - | - | - |
| UTN 16 ADF | 3 | m³/h | 2248 | 2187 | 2124 | 2059 | 1992 | 1922 | 1848 | 1772 | 1691 | 1605 | 1514 | 1416 | 1309 | 1189 | 1053 | 888 | 664 | - | - | - | - | - |
| | 2 | m³/h | 1789 | 1737 | 1684 | 1628 | 1571 | 1511 | 1447 | 1381 | 1310 | 1234 | 1152 | 1062 | 961 | 843 | 696 | 471 | - | - | - | - | - | - |
| | 1 | m³/h | 1469 | 1425 | 1379 | 1332 | 1282 | 1231 | 1176 | 1119 | 1057 | 991 | 919 | 839 | 748 | 639 | 492 | - | - | - | - | - | - | - |
| UTN 22 DF | 3 | m³/h | 3294 | 3225 | 3154 | 3081 | 3005 | 2927 | 2845 | 2760 | 2672 | 2578 | 2480 | 2375 | 2263 | 2141 | 2006 | 1855 | 1676 | 1448 | 1065 | - | - | - |
| | 2 | m³/h | 2389 | 2329 | 2267 | 2203 | 2137 | 2067 | 1995 | 1920 | 1840 | 1756 | 1666 | 1570 | 1464 | 1347 | 1212 | 1050 | 828 | - | - | - | - | - |
| | 1 | m³/h | 1730 | 1680 | 1628 | 1575 | 1519 | 1461 | 1400 | 1336 | 1268 | 1196 | 1118 | 1032 | 937 | 829 | 698 | 518 | - | - | - | - | - | - |
| UTN 22 ADF | 3 | m³/h | 3051 | 2984 | 2915 | 2844 | 2770 | 2694 | 2614 | 2531 | 2444 | 2352 | 2254 | 2150 | 2037 | 1914 | 1776 | 1617 | 1421 | 1138 | - | - | - | - |
| | 2 | m³/h | 2284 | 2226 | 2166 | 2104 | 2040 | 1973 | 1903 | 1830 | 1753 | 1671 | 1584 | 1490 | 1387 | 1272 | 1140 | 981 | 759 | - | - | - | - | - |
| | 1 | m³/h | 1679 | 1631 | 1580 | 1528 | 1473 | 1416 | 1356 | 1294 | 1227 | 1156 | 1080 | 996 | 903 | 796 | 667 | 490 | - | - | - | - | - | - |
| UTN 30 DF | 3 | m³/h | 3509 | 3484 | 3458 | 3432 | 3405 | 3378 | 3351 | 3324 | 3296 | 3268 | 3239 | 3210 | 3181 | 3152 | 3121 | 3091 | 3060 | 3028 | 2996 | 2931 | 2862 | 2792 |
| | 2 | m³/h | 2860 | 2833 | 2806 | 2779 | 2751 | 2723 | 2694 | 2665 | 2636 | 2606 | 2575 | 2544 | 2512 | 2480 | 2447 | 2413 | 2378 | 2343 | 2307 | 2231 | 2152 | 2066 |
| | 1 | m³/h | 2222 | 2198 | 2173 | 2148 | 2122 | 2096 | 2069 | 2042 | 2014 | 1985 | 1956 | 1926 | 1896 | 1865 | 1833 | 1799 | 1765 | 1730 | 1694 | 1616 | 1532 | 1438 |
| UTN 30 ADF | 3 | m³/h | 3478 | 3452 | 3426 | 3400 | 3373 | 3346 | 3319 | 3292 | 3264 | 3236 | 3207 | 3178 | 3148 | 3119 | 3088 | 3058 | 3026 | 2995 | 2962 | 2896 | 2828 | 2756 |
| | 2 | m³/h | 2821 | 2795 | 2768 | 2741 | 2713 | 2685 | 2656 | 2627 | 2597 | 2567 | 2537 | 2506 | 2474 | 2441 | 2408 | 2375 | 2340 | 2305 | 2268 | 2193 | 2113 | 2027 |
| | 1 | m³/h | 2208 | 2183 | 2157 | 2132 | 2105 | 2079 | 2051 | 2023 | 1995 | 1966 | 1936 | 1906 | 1874 | 1842 | 1809 | 1775 | 1740 | 1704 | 1667 | 1587 | 1500 | 1402 |
| UTN 40 DF | 3 | m³/h | 5834 | 5730 | 5624 | 5516 | 5404 | 5291 | 5175 | 5055 | 4933 | 4807 | 4677 | 4543 | 4405 | 4261 | 4112 | 3956 | 3793 | 3621 | 3440 | 3038 | 2557 | 1923 |
| | 2 | m³/h | 4592 | 4499 | 4403 | 4306 | 4207 | 4105 | 4001 | 3895 | 3785 | 3673 | 3557 | 3437 | 3314 | 3186 | 3052 | 2914 | 2769 | 2616 | 2455 | 2100 | 1679 | 1134 |
| | 1 | m³/h | 3729 | 3640 | 3550 | 3458 | 3364 | 3268 | 3170 | 3068 | 2965 | 2858 | 2748 | 2635 | 2518 | 2397 | 2270 | 2139 | 2001 | 1857 | 1704 | 1366 | 965 | - |
| UTN 40 ADF | 3 | m³/h | 5626 | 5526 | 5423 | 5318 | 5210 | 5100 | 4988 | 4872 | 4754 | 4632 | 4507 | 4377 | 4243 | 4104 | 3959 | 3809 | 3651 | 3485 | 3309 | 2919 | 2454 | 1838 |
| | 2 | m³/h | 4479 | 4388 | 4294 | 4199 | 4101 | 4002 | 3899 | 3795 | 3687 | 3576 | 3463 | 3345 | 3224 | 3098 | 2967 | 2831 | 2689 | 2539 | 2380 | 2031 | 1616 | 1077 |
| | 1 | m³/h | 3655 | 3569 | 3481 | 3391 | 3299 | 3205 | 3109 | 3010 | 2909 | 2805 | 2697 | 2587 | 2472 | 2353 | 2230 | 2102 | 1967 | 1826 | 1676 | 1345 | 953 | - |



All copying, even partial, of this manual is strictly forbidden

# 6 VENTILATION FEATURES

## 6.1 ACCESSORIES: AIR PRESSURE DROP

**Legend:**
**Qa** Air flow
**ΔPa** Air pressure drop

| | Qa [m³/h] | | | 150 | 200 | 250 | 300 | 350 | 400 | 450 | 500 | 550 | 600 | 650 | 700 | 750 | 800 | 850 | 900 | 950 | 1000 | 1050 |
|---|---|---|---|---|---|---|---|---|---|---|---|---|---|---|---|---|---|---|---|---|---|---|
| UTN 06 - 06A | MAF | ΔPa | Pa | 2 | 3 | 4 | 5 | 6 | 8 | 10 | 12 | 14 | 15 | 17 | 20 | - | - | - | - | - | - | - |
| | MAFO | | Pa | 2 | 4 | 5 | 6 | 7 | 9 | 12 | 14 | 16 | 18 | 20 | 23 | - | - | - | - | - | - | - |
| | PCOF A* | | Pa | 1 | 1 | 2 | 3 | 4 | 5 | 7 | 8 | 10 | 12 | 14 | 16 | 19 | - | - | - | - | - | - |
| | PCOF M** | | Pa | - | 1 | 1 | 2 | 3 | 3 | 4 | 5 | 6 | 8 | 9 | 10 | 12 | - | - | - | - | - | - |
| | RE | | Pa | - | 1 | 1 | 1 | 2 | 2 | 3 | 5 | 5 | 6 | 7 | 8 | 9 | - | - | - | - | - | - |
| | GR | | Pa | - | 1 | 2 | 2 | 3 | 4 | 5 | 6 | 8 | 9 | 11 | 12 | 14 | - | - | - | - | - | - |
| | GM | | Pa | - | - | - | - | - | 1 | 1 | 1 | 1 | 1 | 2 | 2 | 2 | - | - | - | - | - | - |
| | Qa [m³/h] | | | 300 | 350 | 400 | 450 | 500 | 550 | 600 | 650 | 700 | 750 | 800 | 850 | 900 | 950 | 1000 | 1050 | 1100 | 1150 | 1200 |
| UTN 08 - 08A | MAF | ΔPa | Pa | 6 | 7 | 9 | 10 | 11 | 13 | 15 | 17 | 19 | 22 | 24 | 26 | 28 | - | - | - | - | - | - |
| | MAFO | | Pa | 7 | 8 | 10 | 11 | 13 | 15 | 18 | 20 | 22 | 25 | 28 | 30 | 32 | - | - | - | - | - | - |
| | PCOF A* | | Pa | 3 | 4 | 5 | 7 | 8 | 10 | 12 | 14 | 16 | 19 | 21 | 24 | 27 | 30 | - | - | - | - | - |
| | PCOF M** | | Pa | 2 | 3 | 3 | 4 | 5 | 6 | 8 | 9 | 10 | 12 | 14 | 15 | 17 | 19 | - | - | - | - | - |
| | RE | | Pa | 2 | 3 | 3 | 3 | 4 | 5 | 6 | 7 | 8 | 9 | 11 | 12 | 12 | 14 | - | - | - | - | - |
| | GR | | Pa | 2 | 3 | 4 | 5 | 6 | 8 | 9 | 11 | 12 | 14 | 16 | 18 | 20 | 23 | - | - | - | - | - |
| | GM | | Pa | - | - | 1 | 1 | 1 | 1 | 1 | 2 | 2 | 2 | 3 | 3 | 4 | 4 | - | - | - | - | - |
| | Qa [m³/h] | | | 400 | 500 | 600 | 700 | 800 | 900 | 1000 | 1100 | 1200 | 1300 | 1400 | 1500 | 1600 | 1700 | 1800 | 1900 | 2000 | 2100 | 2200 |
| UTN 12 - 12A | MAF | ΔPa | Pa | 5 | 8 | 10 | 13 | 16 | 18 | 21 | 25 | 29 | 32 | 36 | 40 | - | - | - | - | - | - | - |
| | MAFO | | Pa | 6 | 9 | 12 | 15 | 18 | 21 | 25 | 29 | 33 | 37 | 42 | 46 | - | - | - | - | - | - | - |
| | PCOF A* | | Pa | 2 | 4 | 5 | 7 | 9 | 12 | 15 | 18 | 21 | 25 | 29 | 33 | 38 | - | - | - | - | - | - |
| | PCOF M** | | Pa | 1 | 2 | 3 | 5 | 6 | 8 | 10 | 12 | 14 | 16 | 19 | 21 | 24 | - | - | - | - | - | - |
| | RE | | Pa | 1 | 3 | 3 | 5 | 6 | 7 | 9 | 11 | 13 | 15 | 17 | 20 | 22 | - | - | - | - | - | - |
| | GR | | Pa | 2 | 4 | 5 | 7 | 9 | 12 | 14 | 17 | 21 | 24 | 28 | 32 | 37 | - | - | - | - | - | - |
| | GM | | Pa | - | - | 1 | 1 | 1 | 2 | 2 | 3 | 4 | 4 | 5 | 6 | 7 | - | - | - | - | - | - |
| | Qa [m³/h] | | | 400 | 500 | 600 | 700 | 800 | 900 | 1000 | 1100 | 1200 | 1300 | 1400 | 1600 | 1800 | 2000 | 2200 | 2400 | 2600 | 2800 | 3000 |
| UTN 16 - 16A | MAF | ΔPa | Pa | 4 | 6 | 8 | 9 | 11 | 13 | 16 | 18 | 20 | 23 | 26 | 32 | 38 | 44 | - | - | - | - | - |
| | MAFO | | Pa | 5 | 7 | 9 | 11 | 13 | 15 | 18 | 21 | 23 | 27 | 30 | 37 | 44 | 51 | - | - | - | - | - |
| | PCOF A* | | Pa | 1 | 2 | 3 | 4 | 5 | 7 | 8 | 10 | 12 | 14 | 16 | 21 | 27 | 33 | - | - | - | - | - |
| | PCOF M** | | Pa | 1 | 1 | 2 | 3 | 3 | 4 | 5 | 6 | 8 | 9 | 10 | 14 | 17 | 21 | - | - | - | - | - |
| | RE | | Pa | 1 | 2 | 3 | 3 | 4 | 5 | 6 | 7 | 8 | 10 | 12 | 15 | 19 | 23 | - | - | - | - | - |
| | GR | | Pa | 1 | 2 | 3 | 5 | 6 | 7 | 9 | 11 | 13 | 16 | 18 | 24 | 30 | 37 | - | - | - | - | - |
| | GM | | Pa | - | - | - | 1 | 1 | 1 | 1 | 2 | 2 | 3 | 3 | 4 | 6 | 7 | - | - | - | - | - |
| | Qa [m³/h] | | | 500 | 600 | 700 | 800 | 900 | 1000 | 1100 | 1200 | 1300 | 1400 | 1600 | 1800 | 2000 | 2200 | 2400 | 2600 | 2800 | 3000 | 3200 |
| UTN 22 - 22A | MAF | ΔPa | Pa | 4 | 5 | 6 | 7 | 8 | 10 | 12 | 13 | 15 | 17 | 21 | 25 | 29 | 33 | 38 | 43 | 48 | - | - |
| | MAFO | | Pa | 4 | 6 | 7 | 8 | 10 | 12 | 14 | 15 | 18 | 20 | 24 | 29 | 34 | 38 | 44 | 50 | 55 | - | - |
| | PCOF A* | | Pa | 1 | 2 | 3 | 4 | 5 | 7 | 8 | 10 | 12 | 14 | 16 | 21 | 27 | 33 | 40 | 48 | 56 | 65 | - |
| | PCOF M** | | Pa | 1 | 1 | 2 | 3 | 3 | 4 | 5 | 6 | 8 | 9 | 10 | 14 | 17 | 21 | 26 | 31 | 36 | 42 | - |
| | RE | | Pa | 1 | 2 | 2 | 2 | 2 | 4 | 4 | 5 | 6 | 7 | 9 | 11 | 13 | 15 | 19 | 22 | 25 | 29 | - |
| | GR | | Pa | 1 | 2 | 3 | 3 | 4 | 5 | 6 | 8 | 9 | 10 | 13 | 17 | 21 | 25 | 30 | 36 | 41 | 48 | - |
| | GM | | Pa | - | - | - | - | 1 | 1 | 1 | 1 | 1 | 2 | 2 | 3 | 4 | 5 | 6 | 7 | 8 | 9 | - |
| | Qa [m³/h] | | | 1200 | 1300 | 1400 | 1500 | 1600 | 1700 | 1800 | 2000 | 2200 | 2400 | 2600 | 2800 | 3000 | 3200 | 3400 | 3600 | 3800 | 4000 | 4200 |
| UTN 30 - 30A | MAF | ΔPa | Pa | - | - | 13 | 14 | 16 | 18 | 18 | 22 | 26 | 29 | 33 | 36 | 40 | 45 | 49 | - | - | - | - |
| | MAFO | | Pa | - | - | 15 | 17 | 18 | 20 | 21 | 25 | 30 | 33 | 38 | 42 | 46 | 52 | - | - | - | - | - |
| | PCOF A* | | Pa | 8 | 9 | 10 | 12 | 14 | 15 | 17 | 21 | 26 | 31 | 36 | 42 | 48 | 54 | 61 | - | - | - | - |
| | PCOF M** | | Pa | 5 | 6 | 7 | 8 | 9 | 10 | 11 | 14 | 17 | 20 | 23 | 27 | 31 | 35 | 40 | - | - | - | - |
| | RE | | Pa | - | - | 5 | 5 | 6 | 7 | 7 | 9 | 11 | 13 | 15 | 17 | 20 | 23 | 26 | - | - | - | - |
| | GR | | Pa | 5 | 6 | 7 | 8 | 9 | 11 | 12 | 15 | 18 | 21 | 25 | 29 | 33 | 38 | 43 | - | - | - | - |
| | GM | | Pa | 1 | 1 | 1 | 1 | 1 | 2 | 2 | 2 | 3 | 4 | 4 | 5 | 6 | 7 | 8 | - | - | - | - |
| | Qa [m³/h] | | | 1600 | 1700 | 1800 | 1900 | 2000 | 2100 | 2200 | 2400 | 2600 | 2800 | 3000 | 3200 | 3400 | 3600 | 3800 | 4000 | 4200 | 4400 | 4600 |
| UTN 40 - 40A | MAF | ΔPa | Pa | 13 | 14 | 15 | 17 | 17 | 19 | 20 | 23 | 26 | 29 | 33 | 36 | 39 | 42 | 46 | 50 | 53 | 57 | 62 |
| | MAFO | | Pa | 15 | 16 | 17 | 19 | 20 | 22 | 23 | 27 | 30 | 34 | 38 | 41 | 45 | 49 | 53 | 58 | 61 | 66 | 71 |
| | PCOF A* | | Pa | 9 | 10 | 11 | 12 | 13 | 15 | 16 | 19 | 22 | 25 | 20 | 33 | 36 | 40 | 45 | 50 | 54 | 59 | 65 |
| | PCOF M** | | Pa | 5 | 6 | 6 | 7 | 7 | 9 | 9 | 11 | 13 | 15 | 17 | 19 | 21 | 24 | 26 | 30 | 32 | 35 | 38 |
| | RE | | Pa | 0 | 5 | 6 | 7 | 7 | 8 | 8 | 10 | 11 | 13 | 15 | 17 | 19 | 21 | 24 | 27 | 28 | 31 | 35 |
| | GR | | Pa | 7 | 8 | 9 | 10 | 11 | 12 | 13 | 16 | 18 | 21 | 24 | 28 | 31 | 35 | 39 | 44 | 48 | 53 | 58 |
| | GM | | Pa | 1 | 1 | 1 | 2 | 2 | 2 | 2 | 3 | 3 | 4 | 4 | 5 | 6 | 7 | 8 | 8 | 9 | 10 | 12 |

***** **Inlet connecting panel to rectangular ducts**
****** **Outlet connecting panel to rectangular ducts**



All copying, even partial, of this manual is strictly forbidden

# 6 VENTILATION FEATURES

## 6.1 ACCESSORIES: AIR PRESSURE DROP

The pressure drops shown below refer to accessories that are not affected by the various sizes of the thermal ventilating units.
Pressure drops refer to the accessory itself and are not related to the size of the thermal ventilating units.

**Legend**:
Qa Air flow
ΔPa Air pressure drop

| Qa[m³/h] | | ΔPa | 300 | 400 | 500 | 600 | 700 | 800 | 900 | 1000 | 1100 | 1200 | 1300 | 1400 | 1500 | 1600 | 1700 | 1800 | 1900 | 2000 | 2100 |
|---|---|---|---|---|---|---|---|---|---|---|---|---|---|---|---|---|---|---|---|---|---|
| UTN | TFA - TFM | Pa | 1 | 1 | 2 | 3 | 4 | 6 | 7 | 9 | 11 | 13 | 15 | 17 | 20 | 23 | 26 | 29 | 32 | 35 | 39 |
| | CA2 | Pa | 1 | 3 | 5 | 8 | 11 | 15 | 20 | 25 | 31 | 37 | 44 | - | - | - | - | - | - | - | - |
| | CA3 | Pa | - | - | 1 | 2 | 3 | 5 | 7 | 9 | 12 | 15 | 19 | 23 | 27 | 31 | 36 | 41 | 47 | 52 | 59 |
| | CAF2 | Pa | 4 | 8 | 12 | 17 | 22 | 29 | 36 | 44 | 53 | 62 | 72 | - | - | - | - | - | - | - | - |
| | CAF3 | Pa | 2 | 4 | 5 | 8 | 10 | 13 | 17 | 20 | 24 | 29 | 33 | 39 | 44 | 50 | 56 | 62 | 69 | 76 | 83 |
| | CM1 | Pa | 13 | 24 | 37 | 53 | 73 | - | - | - | - | - | - | - | - | - | - | - | - | - | - |
| | CM2 | Pa | 1 | 1 | 2 | 3 | 5 | 6 | 7 | 9 | 11 | 13 | 16 | - | - | - | - | - | - | - | - |
| | CM3 | Pa | - | - | 1 | 1 | 1 | 1 | 2 | 2 | 3 | 3 | 4 | 5 | 5 | 6 | 7 | 7 | 8 | 9 | 10 |

## 6.2 SOUND POWER LEVELS FOR OCTAVE BAND

**Legend:**
**Psu** Available static pressure
**$L_{WA}$** A-weighted sound power
**Vr** Fan speed:
**3**= high
**2**= medium
**1**= low

| | | Lw | | | | | | | |
|---|---|---|---|---|---|---|---|---|---|
| | | 125 Hz | 250 Hz | 500 Hz | 1000 Hz | 2000 Hz | 4000 Hz | 8000 Hz | LwA |
| | Vr | dB | dB | dB | dB | dB | dB | dB | dB/A |
| UTN 06 - 06A | high | 40,6 | 53,6 | 56,0 | 58,9 | 56,7 | 50,9 | 42,1 | 63,0 |
| | med | 36,5 | 49,2 | 51,2 | 52,0 | 48,2 | 44,9 | 36,5 | 57,0 |
| | low | 29,5 | 42,9 | 40,9 | 43,3 | 39,3 | 33,9 | 24,9 | 48,0 |
| UTN 08 - 08A | high | 43,6 | 47,0 | 60,0 | 62,0 | 60,7 | 54,8 | 46,2 | 66,0 |
| | med | 40,7 | 53,8 | 53,8 | 57,0 | 53,6 | 50,6 | 43,3 | 61,0 |
| | low | 33,8 | 47,7 | 47,0 | 49,8 | 47,0 | 41,9 | 33,5 | 54,0 |
| UTN 12 - 12A | high | 45,0 | 56,9 | 60,8 | 64,7 | 63,5 | 57,7 | 49,7 | 69,0 |
| | med | 41,5 | 52,6 | 56,9 | 59,0 | 54,7 | 50,9 | 40,5 | 63,0 |
| | low | 37,0 | 48,8 | 53,0 | 54,4 | 50,0 | 48,6 | 33,5 | 59,0 |
| UTN 16 - 16A | high | 50,7 | 62,1 | 64,8 | 68,1 | 66,5 | 62,5 | 56,2 | 72,0 |
| | med | 45,0 | 57,5 | 60,1 | 62,5 | 58,9 | 56,4 | 49,2 | 67,0 |
| | low | 40,5 | 53,4 | 55,9 | 57,5 | 54,3 | 50,3 | 42,4 | 62,0 |
| UTN 22 - 22A | high | 52,0 | 62,5 | 65,2 | 70,0 | 69,2 | 64,5 | 58,2 | 74,0 |
| | med | 46,2 | 57,7 | 59,9 | 62,8 | 60,5 | 57,1 | 50,0 | 67,0 |
| | low | 39,3 | 50,6 | 54,2 | 55,9 | 53,1 | 47,8 | 41,5 | 60,0 |
| UTN 30 - 30A | high | 61,0 | 70,5 | 70,0 | 72,5 | 71,1 | 69,6 | 63,8 | 78,0 |
| | med | 58,3 | 65,1 | 67,1 | 67,9 | 65,8 | 64,2 | 56,7 | 73,0 |
| | low | 52,1 | 61,3 | 62,3 | 63,8 | 62,6 | 60,7 | 49,1 | 69,0 |
| UTN 40 - 40A | high | 75,5 | 79,1 | 74,2 | 73,8 | 71,9 | 68,7 | 62,4 | 79,0 |
| | med | 71,1 | 75,3 | 69,9 | 69,0 | 67,0 | 62,7 | 55,5 | 74,0 |
| | low | 66,2 | 71,9 | 65,8 | 64,8 | 62,3 | 56,5 | 48,8 | 70,0 |


All copying, even partial, of this manual is strictly forbidden

# 7 PERFORMANCES

## 7.1 COOLING CAPACITY

**Legend:**

**$Tbs_1$** Inlet air temperature D.B.
**$Tbu_1$** Inlet air temperature W.B.
**$Tw_1$** Inlet water temperature
**$Tw_2$** Outlet water temperature
**Qa** Air flow

**PFT** Total cooling capacity
**PFS** Sensible cooling capacity
**Qw** Water flow rate
**ΔPw** Pressure drop on water side

| $Tbs_1$ / $Tbu_1$ ($UR_1$) °C | | 25 /18 (51%) | | | | | | | | | | | | | | | |
|---|---|---|---|---|---|---|---|---|---|---|---|---|---|---|---|---|---|
| $Tw_1$ / $Tw_2$ °C | | 6/11 | | | | 7/12 | | | | 8/13 | | | | 9/14 | | | |
| | Qa | PFT | PFS | Qw | ΔPw | PFT | PFS | Qw | ΔPw | PFT | PFS | Qw | ΔPw | PFT | PFS | Qw | ΔPw |
| | $m^3/h$ | W | W | l/s | kPa | W | W | l/s | kPa | W | W | l/s | kPa | W | W | l/s | kPa |
| UTN 06 | 300 | 1680 | 1260 | 0,080 | 4 | 1450 | 1160 | 0,069 | 3 | 1290 | 1100 | 0,061 | 2 | 1120 | 1040 | 0,053 | 2 |
| | 450 | 2390 | 1790 | 0,114 | 7 | 2040 | 1650 | 0,097 | 5 | 1630 | 1500 | 0,078 | 4 | 1430 | 1430 | 0,068 | 3 |
| | 600 | 3010 | 2270 | 0,143 | 11 | 2590 | 2110 | 0,123 | 8 | 2110 | 1930 | 0,101 | 6 | 1800 | 1800 | 0,086 | 4 |
| UTN 06A | 300 | 1970 | 1410 | 0,094 | 3 | 1780 | 1340 | 0,085 | 3 | 1580 | 1260 | 0,076 | 2 | 1380 | 1180 | 0,066 | 2 |
| | 450 | 2820 | 2060 | 0,134 | 6 | 2410 | 1890 | 0,115 | 4 | 1940 | 1710 | 0,093 | 3 | 1730 | 1730 | 0,082 | 2 |
| | 600 | 3630 | 2680 | 0,173 | 9 | 3130 | 2470 | 0,149 | 7 | 2560 | 2250 | 0,122 | 5 | 2140 | 2140 | 0,102 | 4 |
| UTN 08 | 400 | 2170 | 1620 | 0,103 | 6 | 1840 | 1490 | 0,088 | 5 | 1460 | 1350 | 0,070 | 3 | 1330 | 1330 | 0,063 | 3 |
| | 600 | 3010 | 2270 | 0,143 | 11 | 2590 | 2110 | 0,123 | 8 | 2110 | 1930 | 0,101 | 6 | 1800 | 1800 | 0,086 | 4 |
| | 800 | 3740 | 2860 | 0,178 | 16 | 3220 | 2660 | 0,154 | 12 | 2660 | 2450 | 0,127 | 9 | 2240 | 2240 | 0,107 | 6 |
| UTN 08A | 400 | 2530 | 1840 | 0,120 | 5 | 2140 | 1680 | 0,102 | 4 | 1840 | 1560 | 0,088 | 3 | 1600 | 1470 | 0,076 | 2 |
| | 600 | 3630 | 2680 | 0,173 | 9 | 3130 | 2470 | 0,149 | 7 | 2560 | 2250 | 0,122 | 5 | 2140 | 2140 | 0,102 | 4 |
| | 800 | 4600 | 3460 | 0,219 | 14 | 3990 | 3210 | 0,190 | 11 | 3300 | 2940 | 0,158 | 8 | 2740 | 2740 | 0,131 | 5 |
| UTN 12 | 800 | 4220 | 3070 | 0,201 | 12 | 3630 | 2840 | 0,173 | 9 | 2960 | 2580 | 0,141 | 6 | 2490 | 2490 | 0,119 | 5 |
| | 1000 | 5030 | 3660 | 0,269 | 17 | 4340 | 3390 | 0,207 | 13 | 3580 | 3100 | 0,171 | 9 | 2990 | 2990 | 0,142 | 7 |
| | 1200 | 5770 | 4200 | 0,275 | 21 | 4990 | 3900 | 0,238 | 16 | 4140 | 3580 | 0,197 | 12 | 3440 | 3440 | 0,164 | 8 |
| UTN12A | 800 | 4700 | 3430 | 0,224 | 10 | 4050 | 3170 | 0,193 | 8 | 3320 | 2880 | 0,158 | 6 | 2730 | 2730 | 0,130 | 4 |
| | 1000 | 5640 | 4150 | 0,269 | 14 | 4890 | 3850 | 0,233 | 11 | 4060 | 3530 | 0,194 | 8 | 3300 | 3300 | 0,158 | 5 |
| | 1200 | 6510 | 4830 | 0,310 | 18 | 5660 | 4490 | 0,270 | 14 | 4730 | 4140 | 0,226 | 10 | 3830 | 3830 | 0,183 | 7 |
| UTN 16 | 1200 | 6020 | 4740 | 0,287 | 15 | 5180 | 4410 | 0,247 | 12 | 3870 | 3870 | 0,185 | 7 | 3550 | 3550 | 0,169 | 6 |
| | 1400 | 6770 | 5400 | 0,323 | 19 | 5840 | 5040 | 0,279 | 14 | 4370 | 4370 | 0,208 | 9 | 4010 | 4010 | 0,191 | 7 |
| | 1600 | 7470 | 6040 | 0,356 | 22 | 6470 | 5650 | 0,308 | 17 | 4830 | 4830 | 0,230 | 10 | 4440 | 4440 | 0,212 | 9 |
| UTN 16A | 1200 | 6650 | 5130 | 0,317 | 10 | 5640 | 4720 | 0,269 | 7 | 4260 | 4260 | 0,203 | 4 | 3870 | 3870 | 0,185 | 4 |
| | 1400 | 7570 | 5900 | 0,361 | 12 | 6470 | 5460 | 0,308 | 9 | 4870 | 4870 | 0,232 | 6 | 4450 | 4450 | 0,212 | 5 |
| | 1600 | 8440 | 6640 | 0,402 | 15 | 7240 | 6170 | 0,345 | 11 | 5450 | 5450 | 0,260 | 7 | 4990 | 4990 | 0,238 | 6 |
| UTN 22 | 1600 | 8930 | 6680 | 0,425 | 16 | 7730 | 6200 | 0,369 | 12 | 6380 | 5680 | 0,305 | 9 | 5250 | 5250 | 0,251 | 6 |
| | 1900 | 10220 | 7720 | 0,487 | 20 | 8860 | 7180 | 0,422 | 16 | 7370 | 6610 | 0,352 | 11 | 6030 | 6030 | 0,288 | 8 |
| | 2200 | 11420 | 8710 | 0,544 | 24 | 9920 | 8120 | 0,473 | 19 | 8280 | 7490 | 0,395 | 14 | 6760 | 6760 | 0,322 | 10 |
| UTN 22A | 1600 | 10070 | 7360 | 0,480 | 13 | 8740 | 6810 | 0,417 | 10 | 7230 | 6210 | 0,345 | 7 | 5840 | 5840 | 0,279 | 5 |
| | 1900 | 11660 | 8600 | 0,555 | 17 | 10150 | 7980 | 0,484 | 13 | 8470 | 7320 | 0,404 | 9 | 6800 | 6800 | 0,324 | 6 |
| | 2200 | 13150 | 9800 | 0,627 | 21 | 11480 | 9110 | 0,547 | 16 | 9630 | 8390 | 0,459 | 12 | 7700 | 7700 | 0,367 | 8 |
| UTN 30 | 2000 | 11600 | 8520 | 0,552 | 18 | 10180 | 7950 | 0,485 | 15 | 8640 | 7340 | 0,412 | 11 | 6670 | 6670 | 0,318 | 7 |
| | 2500 | 13770 | 10270 | 0,656 | 25 | 12120 | 9610 | 0,577 | 20 | 10330 | 8910 | 0,493 | 15 | 7970 | 7970 | 0,380 | 9 |
| | 3000 | 15780 | 11930 | 0,752 | 32 | 13890 | 11180 | 0,662 | 25 | 11870 | 10410 | 0,566 | 19 | 9150 | 9150 | 0,437 | 12 |
| UTN 30A | 2000 | 12920 | 9310 | 0,616 | 25 | 11510 | 8720 | 0,549 | 20 | 9990 | 8110 | 0,476 | 15 | 8300 | 7450 | 0,396 | 11 |
| | 2500 | 15380 | 11280 | 0,732 | 33 | 13700 | 10600 | 0,653 | 27 | 11900 | 9880 | 0,568 | 21 | 9940 | 9120 | 0,474 | 15 |
| | 3000 | 17650 | 13180 | 0,841 | 42 | 15720 | 12400 | 0,750 | 34 | 13670 | 11590 | 0,652 | 27 | 11440 | 10740 | 0,546 | 20 |
| UTN 40 | 3000 | 15010 | 11400 | 0,715 | 15 | 13010 | 10620 | 0,620 | 12 | 10780 | 9780 | 0,514 | 8 | 8660 | 8660 | 0,413 | 6 |
| | 4000 | 18580 | 14380 | 0,886 | 22 | 16180 | 13460 | 0,772 | 17 | 13570 | 12480 | 0,647 | 13 | 10820 | 10820 | 0,516 | 8 |
| | 5000 | 21760 | 17150 | 1,037 | 29 | 19000 | 16100 | 0,906 | 23 | 16010 | 14990 | 0,763 | 17 | 12730 | 12730 | 0,607 | 11 |
| UTN 40A | 3000 | 17020 | 12770 | 0,811 | 15 | 14860 | 11900 | 0,708 | 12 | 12460 | 10970 | 0,594 | 8 | 9730 | 9730 | 0,464 | 5 |
| | 4000 | 21260 | 16340 | 1,014 | 22 | 18640 | 15300 | 0,889 | 17 | 15780 | 14210 | 0,753 | 13 | 12270 | 12270 | 0,585 | 8 |
| | 5000 | 25080 | 19710 | 1,195 | 29 | 22020 | 18520 | 1,050 | 23 | 18720 | 17270 | 0,893 | 17 | 14540 | 14540 | 0,694 | 11 |



All copying, even partial, of this manual is strictly forbidden

# 7 PERFORMANCES

## 7.1 COOLING CAPACITY

**Legend:**

| | | | |
|---|---|---|---|
| **$Tbs_1$** | Inlet air temperature D.B. | **PFT** | Total cooling capacity |
| **$Tbu_1$** | Inlet air temperature W.B. | **PFS** | Sensible cooling capacity |
| **$Tw_1$** | Inlet water temperature | **Qw** | Water flow rate |
| **$Tw_2$** | Outlet water temperature | **ΔPw** | Pressure drop on water side |
| **Qa** | Air flow | | |

| $Tbs_1$ / $Tbu_1$ ($UR_1$) °C | 27 /19 (47%) | | | | | | | | | | | | | | | | |
|---|---|---|---|---|---|---|---|---|---|---|---|---|---|---|---|---|---|
| $Tw_1$ / $Tw_2$ °C | | 6/11 | | | | 7/12 | | | | 8/13 | | | | 9/14 | | | |
| | Qa | PFT | PFS | Qw | ΔPw | PFT | PFS | Qw | ΔPw | PFT | PFS | Qw | ΔPw | PFT | PFS | Qw | ΔPw |
| | $m^3/h$ | W | W | l/s | kPa | W | W | l/s | kPa | W | W | l/s | kPa | W | W | l/s | kPa |
| UTN 06 | 300 | 2030 | 1460 | 0,097 | 5 | 1780 | 1360 | 0,085 | 4 | 1500 | 1250 | 0,072 | 3 | 1320 | 1180 | 0,063 | 2 |
| | 450 | 2840 | 2060 | 0,135 | 10 | 2520 | 1930 | 0,120 | 8 | 2160 | 1800 | 0,103 | 6 | 1760 | 1650 | 0,084 | 4 |
| | 600 | 3560 | 2600 | 0,169 | 14 | 3150 | 2450 | 0,150 | 12 | 2720 | 2290 | 0,130 | 9 | 2250 | 2110 | 0,107 | 6 |
| UTN 06A | 300 | 2300 | 1620 | 0,110 | 4 | 2020 | 1500 | 0,096 | 3 | 1820 | 1420 | 0,087 | 3 | 1620 | 1340 | 0,077 | 2 |
| | 450 | 3340 | 2370 | 0,159 | 8 | 2960 | 2210 | 0,141 | 6 | 2550 | 2050 | 0,122 | 5 | 2060 | 1860 | 0,098 | 3 |
| | 600 | 4270 | 3070 | 0,203 | 12 | 3800 | 2870 | 0,181 | 10 | 3290 | 2670 | 0,157 | 8 | 2730 | 2460 | 0,130 | 5 |
| UTN 08 | 400 | 2580 | 1870 | 0,123 | 8 | 2280 | 1750 | 0,109 | 7 | 1950 | 1620 | 0,093 | 5 | 1570 | 1480 | 0,075 | 3 |
| | 600 | 3560 | 2600 | 0,169 | 14 | 3150 | 2450 | 0,150 | 12 | 2720 | 2290 | 0,130 | 9 | 2250 | 2110 | 0,107 | 6 |
| | 800 | 4400 | 3270 | 0,210 | 21 | 3910 | 3080 | 0,186 | 17 | 3390 | 2890 | 0,162 | 13 | 2660 | 2660 | 0,127 | 9 |
| UTN 08A | 400 | 3010 | 2120 | 0,143 | 6 | 2660 | 1980 | 0,127 | 5 | 2280 | 1830 | 0,109 | 4 | 1880 | 1670 | 0,090 | 3 |
| | 600 | 4270 | 3070 | 0,203 | 12 | 3800 | 2870 | 0,181 | 10 | 3290 | 2670 | 0,157 | 8 | 2730 | 2460 | 0,130 | 5 |
| | 800 | 5400 | 3950 | 0,257 | 18 | 4810 | 3710 | 0,230 | 15 | 4190 | 3460 | 0,200 | 11 | 3500 | 3210 | 0,167 | 8 |
| UTN 12 | 800 | 4990 | 3520 | 0,238 | 16 | 4430 | 3300 | 0,211 | 13 | 3830 | 3070 | 0,183 | 10 | 3160 | 2820 | 0,151 | 7 |
| | 1000 | 5920 | 4180 | 0,282 | 22 | 5270 | 3930 | 0,251 | 18 | 4570 | 3660 | 0,218 | 14 | 3800 | 3380 | 0,181 | 10 |
| | 1200 | 6780 | 4800 | 0,323 | 28 | 6040 | 4510 | 0,288 | 23 | 5240 | 4210 | 0,250 | 18 | 4380 | 3900 | 0,209 | 13 |
| UTN 12A | 800 | 5520 | 3920 | 0,263 | 14 | 4920 | 3680 | 0,235 | 11 | 4270 | 3430 | 0,204 | 9 | 3540 | 3150 | 0,169 | 6 |
| | 1000 | 6600 | 4740 | 0,315 | 19 | 5900 | 4450 | 0,281 | 15 | 5140 | 4160 | 0,245 | 12 | 4300 | 3850 | 0,205 | 9 |
| | 1200 | 7610 | 5500 | 0,363 | 24 | 6800 | 5180 | 0,324 | 19 | 5940 | 4850 | 0,283 | 15 | 5000 | 4500 | 0,238 | 11 |
| UTN 16 | 1200 | 7100 | 5420 | 0,338 | 20 | 6310 | 5110 | 0,301 | 17 | 5460 | 4790 | 0,260 | 13 | 4230 | 4230 | 0,202 | 8 |
| | 1400 | 7970 | 6160 | 0,380 | 25 | 7090 | 5820 | 0,338 | 20 | 6150 | 5470 | 0,293 | 16 | 4760 | 4760 | 0,227 | 10 |
| | 1600 | 8790 | 6890 | 0,419 | 30 | 7820 | 6520 | 0,373 | 24 | 6800 | 6130 | 0,324 | 19 | 5260 | 5260 | 0,251 | 12 |
| UTN 16A | 1200 | 7910 | 5890 | 0,377 | 13 | 6990 | 5530 | 0,333 | 11 | 5990 | 5140 | 0,285 | 8 | 4690 | 4690 | 0,224 | 5 |
| | 1400 | 8960 | 6760 | 0,427 | 17 | 7950 | 6360 | 0,379 | 13 | 6840 | 5930 | 0,326 | 10 | 5340 | 5340 | 0,255 | 7 |
| | 1600 | 9970 | 7600 | 0,475 | 20 | 8850 | 7160 | 0,422 | 16 | 7640 | 6700 | 0,364 | 12 | 5950 | 5950 | 0,284 | 8 |
| UTN 22 | 1600 | 10490 | 7630 | 0,500 | 21 | 9350 | 7170 | 0,446 | 17 | 8130 | 6700 | 0,388 | 13 | 6780 | 6190 | 0,324 | 10 |
| | 1900 | 11970 | 8800 | 0,571 | 26 | 10690 | 8290 | 0,509 | 22 | 9310 | 7760 | 0,444 | 17 | 7800 | 7200 | 0,372 | 12 |
| | 2200 | 13370 | 9920 | 0,637 | 32 | 11940 | 9360 | 0,569 | 26 | 10410 | 8780 | 0,496 | 20 | 8740 | 8170 | 0,417 | 15 |
| UTN 22A | 1600 | 11780 | 8390 | 0,561 | 17 | 10540 | 7880 | 0,503 | 14 | 9200 | 7340 | 0,438 | 11 | 7690 | 6760 | 0,367 | 8 |
| | 1900 | 13600 | 9790 | 0,648 | 22 | 12180 | 9210 | 0,581 | 18 | 10650 | 8600 | 0,508 | 14 | 8970 | 7960 | 0,428 | 10 |
| | 2200 | 15330 | 11150 | 0,731 | 27 | 13740 | 10500 | 0,655 | 22 | 12030 | 9830 | 0,574 | 17 | 10160 | 9120 | 0,485 | 13 |
| UTN 30 | 2000 | 13450 | 9670 | 0,641 | 24 | 12100 | 9130 | 0,577 | 20 | 10660 | 8560 | 0,508 | 16 | 9100 | 7970 | 0,434 | 12 |
| | 2500 | 15950 | 11640 | 0,760 | 32 | 14360 | 11010 | 0,685 | 27 | 12670 | 10360 | 0,605 | 21 | 10850 | 9670 | 0,518 | 16 |
| | 3000 | 18260 | 13510 | 0,871 | 41 | 16450 | 12800 | 0,784 | 34 | 14520 | 12060 | 0,692 | 27 | 12450 | 11290 | 0,594 | 21 |
| UTN 30A | 2000 | 14790 | 10490 | 0,705 | 31 | 13430 | 9930 | 0,640 | 26 | 11990 | 9350 | 0,572 | 21 | 10440 | 8740 | 0,498 | 17 |
| | 2500 | 17610 | 12710 | 0,839 | 42 | 15990 | 12050 | 0,762 | 35 | 14270 | 11370 | 0,680 | 29 | 12430 | 10660 | 0,593 | 23 |
| | 3000 | 20150 | 14820 | 0,960 | 53 | 18350 | 14100 | 0,875 | 45 | 16370 | 13320 | 0,781 | 37 | 14270 | 12520 | 0,681 | 29 |
| UTN 40 | 3000 | 17470 | 13000 | 0,832 | 20 | 15580 | 12270 | 0,743 | 16 | 13540 | 11510 | 0,646 | 13 | 11290 | 10680 | 0,539 | 9 |
| | 4000 | 21560 | 16370 | 1,027 | 29 | 19260 | 15500 | 0,918 | 23 | 16810 | 14590 | 0,801 | 18 | 12810 | 12810 | 0,611 | 11 |
| | 5000 | 25210 | 19510 | 1,201 | 38 | 22550 | 18510 | 1,075 | 31 | 19710 | 17470 | 0,940 | 24 | 15020 | 15020 | 0,717 | 15 |
| UTN 40A | 3000 | 19680 | 14530 | 0,938 | 19 | 17640 | 13710 | 0,841 | 16 | 15440 | 12860 | 0,736 | 12 | 13010 | 11950 | 0,621 | 9 |
| | 4000 | 24530 | 18560 | 1,169 | 28 | 22010 | 17570 | 1,049 | 23 | 19330 | 16540 | 0,921 | 18 | 16410 | 15460 | 0,783 | 14 |
| | 5000 | 28900 | 22370 | 1,378 | 37 | 25950 | 21230 | 1,238 | 31 | 15440 | 12860 | 0,736 | 12 | 17080 | 17080 | 0,815 | 15 |



All copying, even partial, of this manual is strictly forbidden

# 7 PERFORMANCES

## 7.2 HEATING CAPACITY

**Legend:**

**$Tbs_1$** Inlet air temperature D.B.
**$Tw_1$** Inlet water temperature
**$Tw_2$** Outlet water temperature
**Qa** Air flow
**PT** Heating capacity
**Qw** Water flow rate
**ΔPw** Pressure drop on water side

| $Tbs_1$ / $Tbu_1$ ($UR_1$) °C | | 20 | | | | | | | | | | | |
|---|---|---|---|---|---|---|---|---|---|---|---|---|---|
| $Tw_1$ / $Tw_2$ °C | | 50 / 45 | | | 60 / 50 | | | 70 / 60 | | | 90 / 70 | | |
| | Qa | PT | Qw | ΔPw | PT | Qw | ΔPw | PT | Qw | ΔPw | PT | Qw | ΔPw |
| | $m^3/h$ | W | l/s | kPa | W | l/s | kPa | W | l/s | kPa | W | l/s | kPa |
| UTN 06 | 300 | 2410 | 0,116 | 6 | 3060 | 0,074 | 3 | 3970 | 0,097 | 4 | 5330 | 0,065 | 2 |
| | 450 | 3290 | 0,159 | 10 | 4180 | 0,101 | 5 | 5430 | 0,132 | 7 | 7260 | 0,089 | 3 |
| | 600 | 4070 | 0,197 | 15 | 5160 | 0,125 | 7 | 6700 | 0,163 | 10 | 8940 | 0,110 | 5 |
| UTN 06A | 300 | 2690 | 0,130 | 4 | 3450 | 0,084 | 2 | 4450 | 0,108 | 3 | 6020 | 0,074 | 1 |
| | 450 | 3790 | 0,184 | 8 | 4850 | 0,118 | 4 | 6270 | 0,153 | 5 | 8460 | 0,104 | 3 |
| | 600 | 4790 | 0,232 | 12 | 6110 | 0,148 | 5 | 7900 | 0,192 | 8 | 10620 | 0,130 | 4 |
| UTN 08 | 400 | 3010 | 0,146 | 9 | 3830 | 0,093 | 4 | 4970 | 0,121 | 6 | 6660 | 0,082 | 3 |
| | 600 | 4070 | 0,197 | 15 | 5160 | 0,125 | 7 | 6700 | 0,163 | 10 | 8940 | 0,110 | 5 |
| | 800 | 4990 | 0,242 | 22 | 6300 | 0,153 | 9 | 8200 | 0,200 | 15 | 10910 | 0,134 | 7 |
| UTN 08A | 400 | 3440 | 0,166 | 7 | 4400 | 0,107 | 3 | 5690 | 0,139 | 5 | 7680 | 0,094 | 2 |
| | 600 | 4790 | 0,232 | 12 | 6110 | 0,148 | 5 | 7900 | 0,192 | 8 | 10620 | 0,130 | 4 |
| | 800 | 5980 | 0,290 | 18 | 7610 | 0,185 | 8 | 9860 | 0,240 | 12 | 13210 | 0,162 | 6 |
| UTN 12 | 800 | 5760 | 0,279 | 18 | 7320 | 0,178 | 8 | 9490 | 0,231 | 12 | 12690 | 0,156 | 6 |
| | 1000 | 6790 | 0,328 | 23 | 8600 | 0,209 | 10 | 11170 | 0,272 | 16 | 14900 | 0,183 | 7 |
| | 1200 | 7730 | 0,374 | 29 | 9770 | 0,237 | 13 | 12710 | 0,310 | 20 | 16920 | 0,207 | 9 |
| UTN 12A | 800 | 6480 | 0,314 | 15 | 8290 | 0,201 | 7 | 10690 | 0,261 | 10 | 14400 | 0,177 | 5 |
| | 1000 | 7720 | 0,374 | 20 | 9850 | 0,239 | 9 | 12730 | 0,310 | 14 | 17100 | 0,210 | 7 |
| | 1200 | 8880 | 0,430 | 26 | 11300 | 0,274 | 11 | 14630 | 0,356 | 17 | 19590 | 0,240 | 8 |
| UTN 16 | 1200 | 7920 | 0,383 | 21 | 10030 | 0,244 | 9 | 13030 | 0,318 | 14 | 17370 | 0,213 | 7 |
| | 1400 | 8830 | 0,428 | 25 | 11170 | 0,271 | 11 | 14520 | 0,354 | 17 | 19320 | 0,237 | 8 |
| | 1600 | 9690 | 0,469 | 29 | 12220 | 0,297 | 13 | 15920 | 0,388 | 20 | 21150 | 0,259 | 9 |
| UTN 16A | 1200 | 8940 | 0,433 | 14 | 11380 | 0,276 | 6 | 14730 | 0,359 | 9 | 19730 | 0,242 | 4 |
| | 1400 | 10040 | 0,486 | 17 | 12740 | 0,309 | 7 | 16530 | 0,403 | 11 | 22090 | 0,271 | 5 |
| | 1600 | 11080 | 0,536 | 20 | 14040 | 0,341 | 9 | 18230 | 0,444 | 13 | 24330 | 0,298 | 6 |
| UTN 22 | 1600 | 11760 | 0,569 | 21 | 14960 | 0,363 | 9 | 19380 | 0,472 | 14 | 25930 | 0,318 | 7 |
| | 1900 | 13350 | 0,646 | 27 | 16930 | 0,411 | 12 | 21970 | 0,536 | 18 | 29340 | 0,360 | 9 |
| | 2200 | 14830 | 0,718 | 32 | 18770 | 0,455 | 14 | 24400 | 0,595 | 21 | 32520 | 0,399 | 10 |
| UTN 22A | 1600 | 12980 | 0,628 | 17 | 16620 | 0,403 | 7 | 21420 | 0,522 | 11 | 28840 | 0,354 | 5 |
| | 1900 | 14880 | 0,720 | 21 | 19000 | 0,461 | 9 | 24540 | 0,598 | 14 | 32970 | 0,404 | 7 |
| | 2200 | 16680 | 0,807 | 26 | 21260 | 0,516 | 11 | 27500 | 0,670 | 18 | 36870 | 0,452 | 8 |
| UTN 30 | 2000 | 15010 | 0,727 | 24 | 19180 | 0,466 | 11 | 24740 | 0,603 | 16 | 33240 | 0,407 | 8 |
| | 2500 | 17750 | 0,859 | 32 | 22600 | 0,549 | 14 | 29220 | 0,712 | 22 | 39140 | 0,480 | 10 |
| | 3000 | 20270 | 0,980 | 41 | 25760 | 0,625 | 18 | 33350 | 0,813 | 27 | 44570 | 0,546 | 13 |
| UTN 30A | 2000 | 16300 | 0,788 | 31 | 20970 | 0,509 | 14 | 26890 | 0,655 | 21 | 36350 | 0,446 | 10 |
| | 2500 | 19430 | 0,940 | 42 | 24930 | 0,605 | 19 | 32040 | 0,781 | 28 | 43180 | 0,529 | 14 |
| | 3000 | 22340 | 1,081 | 53 | 28590 | 0,694 | 24 | 36810 | 0,897 | 36 | 49510 | 0,607 | 17 |
| UTN 40 | 3000 | 20480 | 0,991 | 25 | 26010 | 0,631 | 11 | 33710 | 0,821 | 17 | 45030 | 0,552 | 8 |
| | 4000 | 25120 | 1,216 | 35 | 31790 | 0,771 | 15 | 41300 | 1,006 | 24 | 55000 | 0,674 | 11 |
| | 5000 | 29270 | 1,416 | 46 | 36950 | 0,897 | 20 | 48090 | 1,172 | 31 | 63880 | 0,784 | 15 |
| UTN 40A | 3000 | 22620 | 1,095 | 25 | 28890 | 0,701 | 11 | 37280 | 0,909 | 17 | 50070 | 0,614 | 8 |
| | 4000 | 28050 | 1,358 | 36 | 35690 | 0,866 | 16 | 46180 | 1,126 | 24 | 61810 | 0,758 | 12 |
| | 5000 | 32960 | 1,595 | 48 | 41800 | 1,015 | 21 | 54230 | 1,321 | 32 | 72350 | 0,887 | 15 |


All copying, even partial, of this manual is strictly forbidden

# 7 PERFORMANCES

## 7.2 HEATING CAPACITY

**Legend:**

**$Tbs_1$** Inlet air temperature D.B.
**$Tw_1$** Inlet water temperature
**$Tw_2$** Outlet water temperature
**Qa** Air flow
**PT** Heating capacity
**Qw** Water flow rate
**ΔPw** Pressure drop on water side

| $Tbs_1$ / $Tbu_1$ ($UR_1$) °C | | 22 | | | | | | | | | | | |
|---|---|---|---|---|---|---|---|---|---|---|---|---|---|
| $Tw_1$ / $Tw_2$ °C | | 50 / 45 | | | 60 / 50 | | | 70 / 60 | | | 90 / 70 | | |
| | Qa | PT | Qw | ΔPw | PT | Qw | ΔPw | PT | Qw | ΔPw | PT | Qw | ΔPw |
| | $m^3/h$ | W | l/s | kPa | W | l/s | kPa | W | l/s | kPa | W | l/s | kPa |
| UTN 06 | 300 | 2220 | 0,107 | 5 | 3060 | 0,074 | 3 | 3970 | 0,097 | 4 | 5330 | 0,065 | 2 |
| | 450 | 3040 | 0,147 | 9 | 4180 | 0,101 | 5 | 5430 | 0,132 | 7 | 7260 | 0,089 | 3 |
| | 600 | 3760 | 0,182 | 13 | 5160 | 0,125 | 7 | 6700 | 0,163 | 10 | 8940 | 0,110 | 5 |
| UTN 06A | 300 | 2480 | 0,120 | 4 | 3450 | 0,084 | 2 | 4450 | 0,108 | 3 | 6020 | 0,074 | 1 |
| | 450 | 3500 | 0,170 | 7 | 4850 | 0,118 | 4 | 6270 | 0,153 | 5 | 8460 | 0,104 | 3 |
| | 600 | 4420 | 0,214 | 11 | 6110 | 0,148 | 5 | 7900 | 0,192 | 8 | 10620 | 0,130 | 4 |
| UTN 08 | 400 | 2780 | 0,135 | 8 | 3830 | 0,093 | 4 | 4970 | 0,121 | 6 | 6660 | 0,082 | 3 |
| | 600 | 3760 | 0,182 | 13 | 5160 | 0,125 | 7 | 6700 | 0,163 | 10 | 8940 | 0,110 | 5 |
| | 800 | 4610 | 0,223 | 19 | 6300 | 0,153 | 9 | 8200 | 0,200 | 15 | 10910 | 0,134 | 7 |
| UTN 08A | 400 | 3170 | 0,154 | 6 | 4400 | 0,107 | 3 | 5690 | 0,139 | 5 | 7680 | 0,094 | 2 |
| | 600 | 4420 | 0,214 | 11 | 6110 | 0,148 | 5 | 7900 | 0,192 | 8 | 10620 | 0,130 | 4 |
| | 800 | 5520 | 0,267 | 16 | 7610 | 0,185 | 8 | 9860 | 0,240 | 12 | 13210 | 0,162 | 6 |
| UTN 12 | 800 | 5320 | 0,258 | 15 | 7320 | 0,178 | 8 | 9490 | 0,231 | 12 | 12690 | 0,156 | 6 |
| | 1000 | 6270 | 0,303 | 20 | 8600 | 0,209 | 10 | 11170 | 0,272 | 16 | 14900 | 0,183 | 7 |
| | 1200 | 7130 | 0,345 | 25 | 9770 | 0,237 | 13 | 12710 | 0,310 | 20 | 16920 | 0,207 | 9 |
| UTN 12A | 800 | 5980 | 0,290 | 13 | 8290 | 0,201 | 7 | 10690 | 0,261 | 10 | 14400 | 0,177 | 5 |
| | 1000 | 7130 | 0,345 | 18 | 9850 | 0,239 | 9 | 12730 | 0,310 | 14 | 17100 | 0,210 | 7 |
| | 1200 | 8200 | 0,397 | 22 | 11300 | 0,274 | 11 | 14630 | 0,356 | 17 | 19590 | 0,240 | 8 |
| UTN 16 | 1200 | 7310 | 0,354 | 18 | 10030 | 0,244 | 9 | 13030 | 0,318 | 14 | 17370 | 0,213 | 7 |
| | 1400 | 8830 | 0,428 | 25 | 11170 | 0,271 | 11 | 14520 | 0,354 | 17 | 19320 | 0,237 | 8 |
| | 1600 | 9690 | 0,469 | 29 | 12220 | 0,297 | 13 | 15920 | 0,388 | 20 | 21150 | 0,259 | 9 |
| UTN 16A | 1200 | 8250 | 0,399 | 12 | 11380 | 0,276 | 6 | 14730 | 0,359 | 9 | 19730 | 0,242 | 4 |
| | 1400 | 10040 | 0,486 | 17 | 12740 | 0,309 | 7 | 16530 | 0,403 | 11 | 22090 | 0,271 | 5 |
| | 1600 | 11080 | 0,536 | 20 | 14040 | 0,341 | 9 | 18230 | 0,444 | 13 | 24330 | 0,298 | 6 |
| UTN 22 | 1600 | 11760 | 0,569 | 21 | 14960 | 0,363 | 9 | 19380 | 0,472 | 14 | 25930 | 0,318 | 7 |
| | 1900 | 13350 | 0,646 | 27 | 16930 | 0,411 | 12 | 21970 | 0,536 | 18 | 29340 | 0,360 | 9 |
| | 2200 | 14830 | 0,718 | 32 | 18770 | 0,455 | 14 | 24400 | 0,595 | 21 | 32520 | 0,399 | 10 |
| UTN 22A | 1600 | 12980 | 0,628 | 17 | 16620 | 0,403 | 7 | 21420 | 0,522 | 11 | 28840 | 0,354 | 5 |
| | 1900 | 14880 | 0,720 | 21 | 19000 | 0,461 | 9 | 24540 | 0,598 | 14 | 32970 | 0,404 | 7 |
| | 2200 | 16680 | 0,807 | 26 | 21260 | 0,516 | 11 | 27500 | 0,670 | 18 | 36870 | 0,452 | 8 |
| UTN 30 | 2000 | 15010 | 0,727 | 24 | 19180 | 0,466 | 11 | 24740 | 0,603 | 16 | 33240 | 0,407 | 8 |
| | 2500 | 17750 | 0,859 | 32 | 22600 | 0,549 | 14 | 29220 | 0,712 | 22 | 39140 | 0,480 | 10 |
| | 3000 | 20270 | 0,980 | 41 | 25760 | 0,625 | 18 | 33350 | 0,813 | 27 | 44570 | 0,546 | 13 |
| UTN 30A | 2000 | 16300 | 0,788 | 31 | 20970 | 0,509 | 14 | 26890 | 0,655 | 21 | 36350 | 0,446 | 10 |
| | 2500 | 19430 | 0,940 | 42 | 24930 | 0,605 | 19 | 32040 | 0,781 | 28 | 43180 | 0,529 | 14 |
| | 3000 | 22340 | 1,081 | 53 | 28590 | 0,694 | 24 | 36810 | 0,897 | 36 | 49510 | 0,607 | 17 |
| UTN 40 | 3000 | 18920 | 0,915 | 21 | 24430 | 0,593 | 10 | 32100 | 0,782 | 15 | 43390 | 0,532 | 7 |
| | 4000 | 23190 | 1,122 | 30 | 29840 | 0,724 | 14 | 39320 | 0,958 | 22 | 52970 | 0,649 | 10 |
| | 5000 | 27010 | 1,308 | 40 | 34670 | 0,842 | 18 | 45780 | 1,116 | 28 | 61540 | 0,754 | 14 |
| UTN 40A | 3000 | 20900 | 1,011 | 21 | 27130 | 0,659 | 10 | 35510 | 0,865 | 15 | 48230 | 0,591 | 7 |
| | 4000 | 25910 | 1,254 | 31 | 33520 | 0,813 | 14 | 43980 | 1,072 | 22 | 59520 | 0,730 | 11 |
| | 5000 | 30430 | 1,473 | 41 | 39250 | 0,953 | 19 | 51620 | 1,258 | 29 | 69690 | 0,854 | 14 |



All copying, even partial, of this manual is strictly forbidden

# 7 PERFORMANCES

## 7.2 DF COIL HEATING CAPACITY

**Legend:**
**$Tbs_1$** Inlet air temperature D.B.
**$Tw_1$** Inlet water temperature
**$Tw_2$** Outlet water temperature
**Qa** Air flow
**PT** Heating capacity
**Qw** Water flow rate
**ΔPw** Pressure drop on water side

| $Tbs_1$ °C | 20 | | | | | | | | | | | | |
|---|---|---|---|---|---|---|---|---|---|---|---|---|---|
| $Tw_1$ / $Tw_2$ °C | | 50 / 45 | | | 60 / 50 | | | 70 / 60 | | | 90 / 70 | | |
| | Qa | PT | Qw | ΔPw | PT | Qw | ΔPw | PT | Qw | ΔPw | PT | Qw | ΔPw |
| | $m^3/h$ | W | l/s | kPa | W | l/s | kPa | W | l/s | kPa | W | l/s | kPa |
| UTN 06DF | 300 | 1660 | 0,080 | 6 | 2010 | 0,049 | 2 | 2730 | 0,066 | 4 | 3540 | 0,043 | 2 |
| | 450 | 2070 | 0,100 | 8 | 2530 | 0,061 | 3 | 3400 | 0,083 | 5 | 4420 | 0,054 | 2 |
| | 600 | 2390 | 0,116 | 11 | 2930 | 0,071 | 4 | 3920 | 0,096 | 7 | 5090 | 0,062 | 3 |
| UTN 08DF | 400 | 1950 | 0,094 | 7 | 2370 | 0,058 | 3 | 3190 | 0,078 | 5 | 4150 | 0,051 | 2 |
| | 600 | 2390 | 0,116 | 11 | 2930 | 0,071 | 4 | 3920 | 0,096 | 7 | 5090 | 0,062 | 3 |
| | 800 | 2740 | 0,133 | 13 | 3360 | 0,081 | 6 | 4490 | 0,110 | 9 | 5820 | 0,071 | 4 |
| UTN12DF | 800 | 3280 | 0,158 | 16 | 4060 | 0,099 | 7 | 5370 | 0,131 | 10 | 7030 | 0,086 | 5 |
| | 1000 | 3650 | 0,176 | 19 | 4510 | 0,109 | 8 | 5970 | 0,146 | 13 | 7800 | 0,096 | 6 |
| | 1200 | 3970 | 0,192 | 22 | 4900 | 0,119 | 9 | 6500 | 0,158 | 14 | 8470 | 0,104 | 7 |
| UTN 16DF | 1200 | 4900 | 0,237 | 15 | 6040 | 0,146 | 6 | 8030 | 0,196 | 10 | 10460 | 0,128 | 5 |
| | 1400 | 5280 | 0,255 | 17 | 6490 | 0,158 | 7 | 8650 | 0,211 | 12 | 11250 | 0,138 | 5 |
| | 1600 | 5620 | 0,272 | 19 | 6900 | 0,168 | 8 | 9210 | 0,224 | 13 | 11960 | 0,147 | 6 |
| UTN 22DF | 1600 | 7930 | 0,384 | 13 | 9880 | 0,240 | 5 | 13020 | 0,317 | 9 | 17110 | 0,210 | 4 |
| | 1900 | 8840 | 0,428 | 15 | 10990 | 0,267 | 7 | 14500 | 0,353 | 10 | 19020 | 0,233 | 5 |
| | 2200 | 9670 | 0,468 | 18 | 12010 | 0,292 | 8 | 15860 | 0,387 | 12 | 20790 | 0,255 | 6 |
| UTN 30DF | 2000 | 10020 | 0,485 | 15 | 12540 | 0,304 | 6 | 16450 | 0,401 | 10 | 21690 | 0,266 | 5 |
| | 2500 | 11530 | 0,558 | 19 | 14400 | 0,350 | 8 | 18920 | 0,461 | 13 | 24900 | 0,305 | 6 |
| | 3000 | 12900 | 0,624 | 23 | 16080 | 0,390 | 10 | 21150 | 0,515 | 16 | 27790 | 0,341 | 7 |
| UTN 40DF | 3000 | 12500 | 0,605 | 17 | 15590 | 0,378 | 7 | 20490 | 0,499 | 11 | 26940 | 0,330 | 5 |
| | 4000 | 14820 | 0,718 | 22 | 18450 | 0,448 | 10 | 24290 | 0,592 | 15 | 31870 | 0,391 | 7 |
| | 5000 | 16860 | 0,816 | 28 | 20960 | 0,508 | 12 | 27630 | 0,673 | 19 | 36190 | 0,444 | 9 |


All copying, even partial, of this manual is strictly forbidden

# 7 PERFORMANCES

## 7.2 DF COIL HEATING CAPACITY

**Legend:**
**$Tbs_1$** Inlet air temperature D.B.
**$Tw_1$** Inlet water temperature
**$Tw_2$** Outlet water temperature
**Qa** Air flow
**PT** Heating capacity
**Qw** Water flow rate
**ΔPw** Pressure drop on water side

| $Tbs_1$ °C | 22 | | | | | | | | | | | | |
|---|---|---|---|---|---|---|---|---|---|---|---|---|---|
| $Tw_1$ / $Tw_2$ °C | | 50 / 45 | | | 60 / 50 | | | 70 / 60 | | | 90 / 70 | | |
| | Qa | PT | Qw | ΔPw | PT | Qw | ΔPw | PT | Qw | ΔPw | PT | Qw | ΔPw |
| | $m^3/h$ | W | l/s | kPa | W | l/s | kPa | W | l/s | kPa | W | l/s | kPa |
| UTN 06DF | 300 | 1520 | 0,074 | 5 | 1870 | 0,045 | 2 | 2590 | 0,063 | 3 | 3390 | 0,042 | 2 |
| | 450 | 1900 | 0,092 | 7 | 2350 | 0,057 | 3 | 3230 | 0,079 | 5 | 4240 | 0,052 | 2 |
| | 600 | 2200 | 0,107 | 9 | 2730 | 0,066 | 4 | 3730 | 0,091 | 6 | 4900 | 0,060 | 3 |
| UTN 08DF | 400 | 1790 | 0,087 | 6 | 2210 | 0,054 | 3 | 3030 | 0,074 | 4 | 3990 | 0,049 | 2 |
| | 600 | 2200 | 0,107 | 9 | 2730 | 0,066 | 4 | 3730 | 0,091 | 6 | 4900 | 0,060 | 3 |
| | 800 | 2520 | 0,122 | 12 | 3130 | 0,076 | 5 | 4270 | 0,104 | 8 | 5590 | 0,069 | 4 |
| UTN12DF | 800 | 3020 | 0,146 | 13 | 3800 | 0,092 | 6 | 5110 | 0,124 | 10 | 6760 | 0,083 | 4 |
| | 1000 | 3360 | 0,163 | 16 | 4220 | 0,102 | 7 | 5680 | 0,139 | 11 | 7510 | 0,092 | 5 |
| | 1200 | 3650 | 0,177 | 19 | 4580 | 0,111 | 8 | 6180 | 0,151 | 13 | 8150 | 0,100 | 6 |
| UTN 16DF | 1200 | 4510 | 0,218 | 13 | 5640 | 0,137 | 6 | 7630 | 0,186 | 9 | 10060 | 0,123 | 4 |
| | 1400 | 4860 | 0,235 | 15 | 6070 | 0,147 | 6 | 8220 | 0,200 | 11 | 10820 | 0,133 | 5 |
| | 1600 | 5170 | 0,250 | 17 | 6450 | 0,157 | 7 | 8750 | 0,213 | 12 | 11500 | 0,141 | 6 |
| UTN 22DF | 1600 | 7310 | 0,354 | 11 | 9250 | 0,225 | 5 | 12380 | 0,302 | 8 | 16460 | 0,202 | 4 |
| | 1900 | 8140 | 0,394 | 13 | 6970 | 0,169 | 8 | 13790 | 0,336 | 9 | 18310 | 0,224 | 4 |
| | 2200 | 8910 | 0,431 | 16 | 11250 | 0,273 | 7 | 15090 | 0,368 | 11 | 20010 | 0,245 | 5 |
| UTN 30DF | 2000 | 9240 | 0,447 | 13 | 11760 | 0,285 | 6 | 15650 | 0,381 | 9 | 20880 | 0,256 | 4 |
| | 2500 | 10630 | 0,515 | 17 | 13490 | 0,327 | 7 | 18000 | 0,439 | 12 | 23970 | 0,294 | 6 |
| | 3000 | 11890 | 0,575 | 20 | 15070 | 0,366 | 9 | 20130 | 0,490 | 14 | 26760 | 0,328 | 7 |
| UTN 40DF | 3000 | 11520 | 0,558 | 14 | 14610 | 0,355 | 6 | 19500 | 0,475 | 10 | 25940 | 0,318 | 5 |
| | 4000 | 13670 | 0,661 | 19 | 17290 | 0,419 | 8 | 23120 | 0,563 | 14 | 30680 | 0,376 | 6 |
| | 5000 | 15550 | 0,753 | 24 | 19630 | 0,476 | 11 | 26290 | 0,641 | 17 | 34840 | 0,427 | 8 |



All copying, even partial, of this manual is strictly forbidden

## 8 INSTALLATION SUGGESTIONS

UTN units can be installed both vertically and horizzontally.
The UTN units are always supplied for the A-A placing.
If a different placing is needed the installer can modify it before mounting the unit (see chapter 3 "POSSIBLE CONFIGURATIONS").
Choose the unit position to have the best ductwork path.
The air sucted by the unit must be filtered: use the MAF or MAFO accessories.
Fit any accessories on the standard unit before installing it.
It is suggested to use anti-vibration joint (available as option) between the unit and the ducts.
Ductworks, in particular the air outlet one, must be insulated to avoid moisture formation.

Keep free space around the fan coil to allow proper operation of the unit and ordinary and extraordinary maintenance.
Install the remote control panel, if any, in a position that can easily be reached by the user to set the functions and that is suitable for the proper detection of the temperature, if provided.
Therefore avoid:
- positions directly exposed to sunlight;
- positions exposed to hot or cold draughts;
- obstacles preventing the proper temperature detection.

If the system is shut down during the winter months, drain off the water from the system to prevent damage due to freezing; if antifreeze solutions are used, check the freezing point using the table shown at the foot of the page.

| Glycol percentage in weight | Freezing temperature (°C) | Capacity correction factor | Pressure drop correction factor |
|---|---|---|---|
| 0 | 0 | 1,00 | 1,00 |
| 10 | -4 | 0,97 | 1,05 |
| 20 | -10 | 0,92 | 1,10 |
| 30 | -16 | 0,87 | 0,05 |
| 40 | -24 | 0,82 | 1,20 |


All copying, even partial, of this manual is strictly forbidden

## 9 DIMENSIONAL DATA

**1:** 6 fast-coupling slots
**2:** condensate discharge - horizontal installation
**3:** condensate discharge - vertical installation
**4:** right-hand hydraulic attachments
**5:** AIR DELIVERY
**6:** AIR INTAKE
6-A supply terms
6-B changeable during installation
**7:** round pre-sheared element (ϕ 100 mm) for external air inlet

**UTN 06 - UTN 08 - UTN 12 - UTN 16**

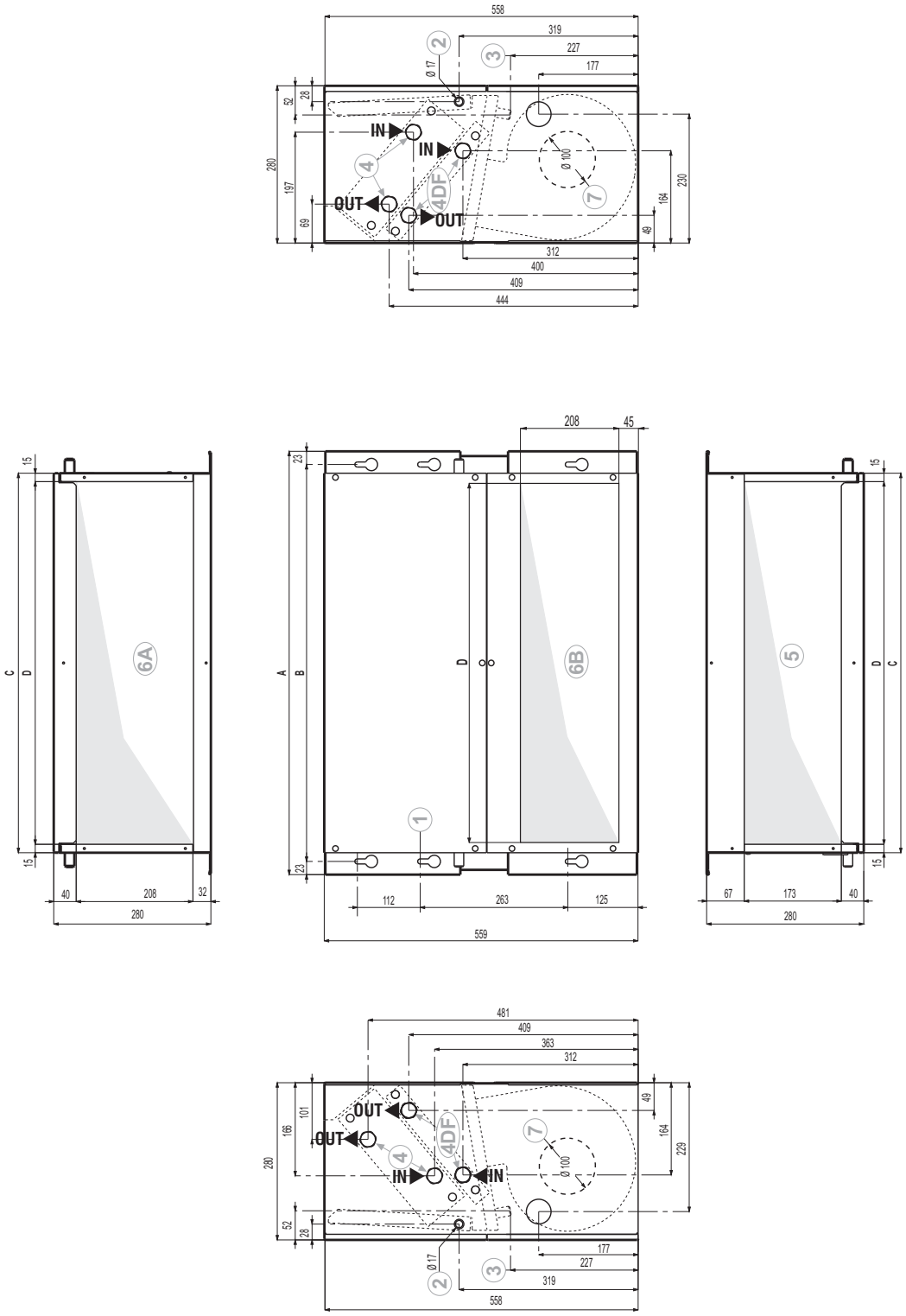


| | A | B | C | D |
|---|---|---|---|---|
| **UTN 06** | 754 | 707 | 676 | 646 |
| **UTN 08** | 754 | 707 | 676 | 646 |
| **UTN 12** | 964 | 917 | 886 | 856 |
| **UTN 16** | 1174 | 1127 | 1096 | 1066 |


All copying, even partial, of this manual is strictly forbidden

## 9 DIMENSIONAL DATA

**1:** 6 fast-coupling slots
**2:** condensate discharge – horizontal installation
**3:** condensate discharge – vertical installation
**4:** right-hand hydraulic attachments
**5:** AIR DELIVERY
**6:** AIR INTAKE
6-A supply terms
6-B changeable during installation
**7:** round pre-sheared element (ϕ 100 mm) for external air inlet

**UTN 22 - UTN 30 - UTN 40**

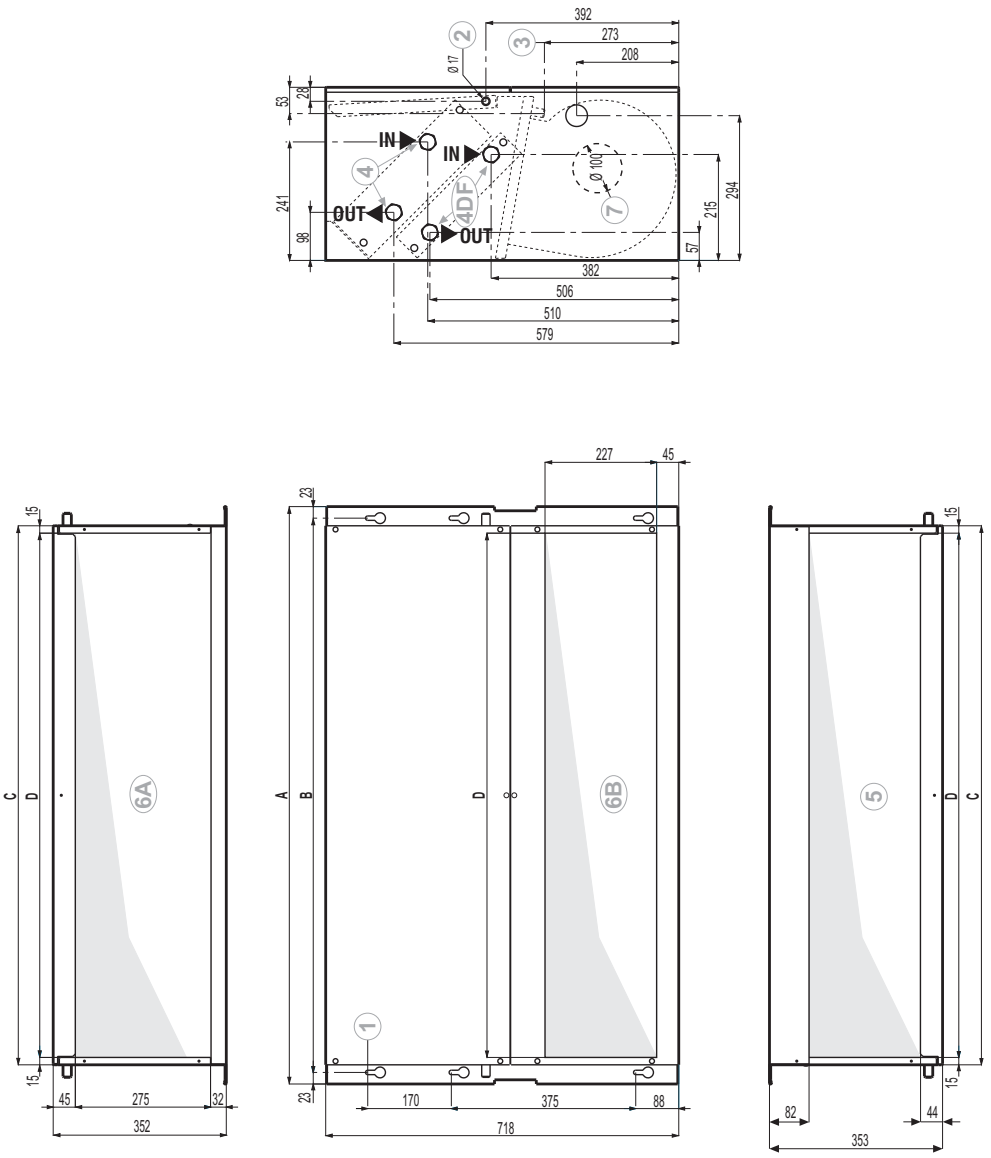


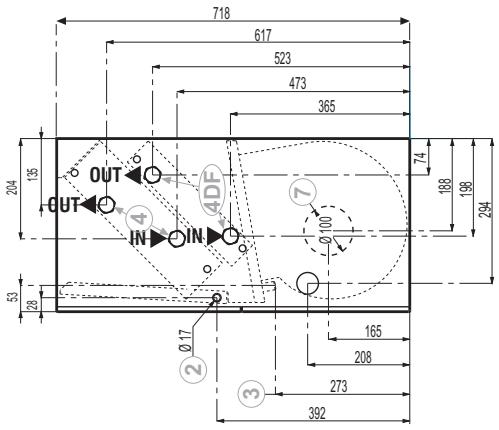


| | A | B | C | D |
|---|---|---|---|---|
| **UTN 22** | 1174 | 1127 | 1096 | 1066 |
| **UTN 30** | 1384 | 1337 | 1306 | 1276 |
| **UTN 40** | 1594 | 1547 | 1516 | 1486 |


All copying, even partial, of this manual is strictly forbidden

## 10 WIRING DIAGRAMS

**Wiring diagram notes**
**WARNING! Turn off the power supply before beginning any wiring connections.**
The dashed lines connections must be carried out by the installer.

**Each fan-coil thermal-ventilating unit requires a switch (IL) on the feeder line with a distance of at least 3 mm between the opening contacts, and a suitable safety fuse (F).**

**10.1 UTN** without control panel:

**BK** = black, high speed
**BU** = blue, medium speed
**CN** = faston connector
**F** = protection fuse, not supplied
**GNYE** = green/yellow, ground
**GY** = grey, medium speed
**IL** = mains switch, not supplied
**M** = fan motor
**RD** = red, low speed
**WH** = white, common

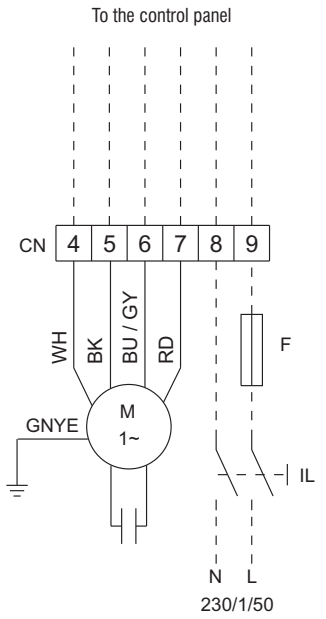


**10.2 UTN** with **CD** remote three speed selector and **TC** fan stop thermostat:

**BK** = black, high speed
**BU** = blue, medium speed
**CD** = remote speed selection switch
**CN** = faston connector
**F** = protection fuse, not supplied
**GNYE** = green/yellow, ground
**GY** = grey, medium speed
**IL** = mains switch, not supplied
**M** = fan motor
**RD** = red, low speed
**TC** = fan stop thermostat
**WH** = white, common

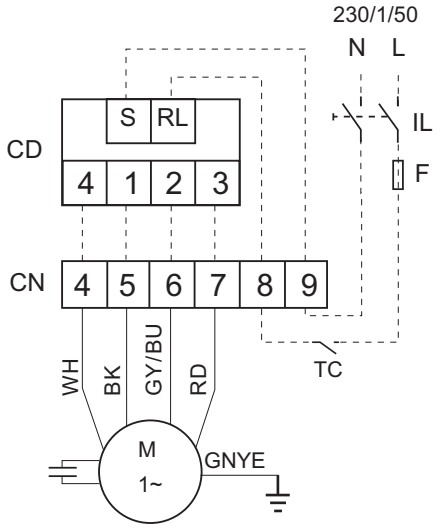


**10.3 UTN** with **CD** remote three speed selector and **TA** room thermostat:

**BK** = black, high speed
**BU** = blue, medium speed
**CD** = remote speed selection switch
**CN** = faston connector
**F** = protection fuse, not supplied
**GNYE** = green/yellow, ground
**GY** = grey, medium speed
**IL** = mains switch, not supplied
**M** = fan motor
**RD** = red, low speed
**TA** = room thermostat
**WH** = white, common

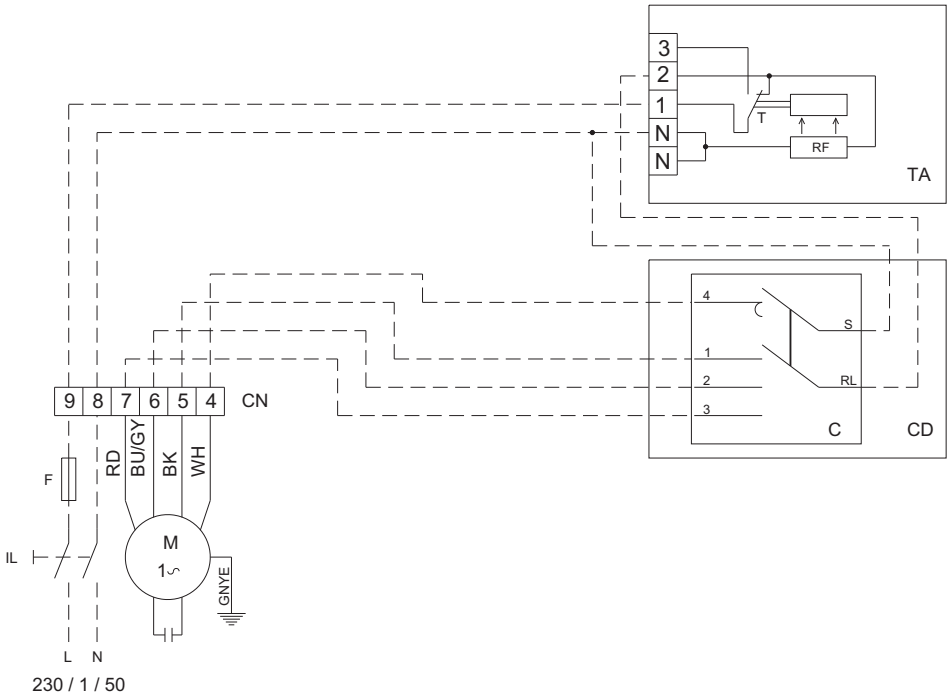



All copying, even partial, of this manual is strictly forbidden

## 10 WIRING DIAGRAMS

**Wiring diagram notes**

**WARNING! Turn off the power supply before beginning any wiring connections.**

The dashed lines connections must be carried out by the installer.

**Each fan-coil thermal-ventilating unit requires a switch (IL) on the feeder line with a distance of at least 3 mm between the opening contacts, and a suitable safety fuse (F).**

**10.4** **UTN** with **CD** remote three speed selector and **TA2** room thermostat:

**BK** = black, high speed
**BU** = blue, medium speed
**CD** = remote speed selection switch
**CN** = faston connector
**F** = protection fuse, not supplied
**GNYE** = green/yellow, ground
**GY** = grey, medium speed
**IL** = mains switch, not supplied
**M** = fan motor
**RD** = red, low speed
**TA2** = room thermostat
**WH** = white, common

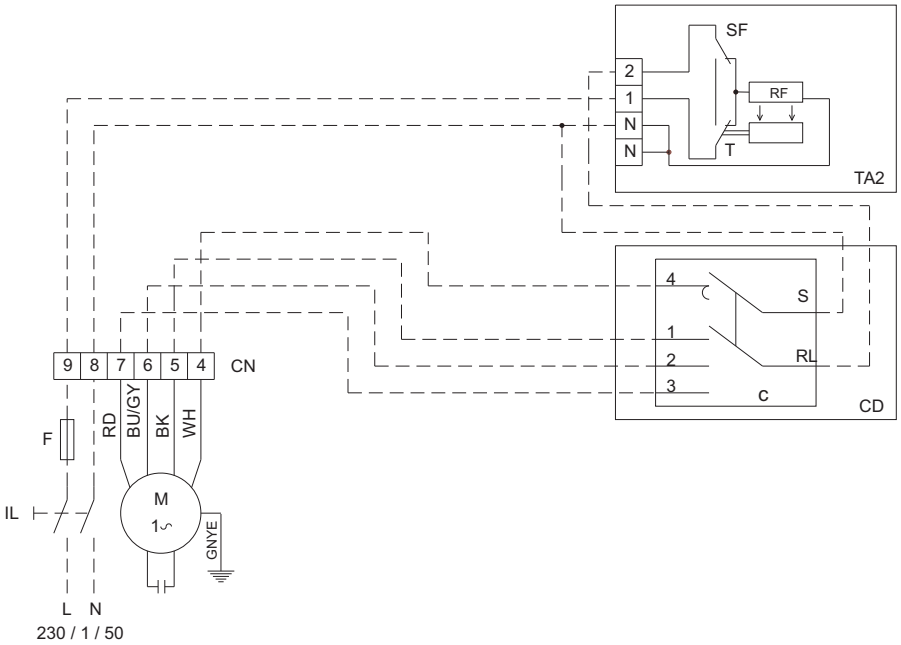


**10.5** **UTN** unit connected in parallel with **CD** remote selection switch, **TA** room thermostat and **KP** power interface:

**BK** = black, high speed
**BU** = blue, medium speed
**CD** = Remote speed selection switch
**CN** = faston connector
**F** = protection fuse, not supplied
**GNYE** = green/yellow, ground
**GY** = grey, medium speed
**KP** = master/sleeve interface, accessory
**IL** = mains switch, not supplied
**M** = fan motor
**RD** = red, low speed
**WH** = white, common

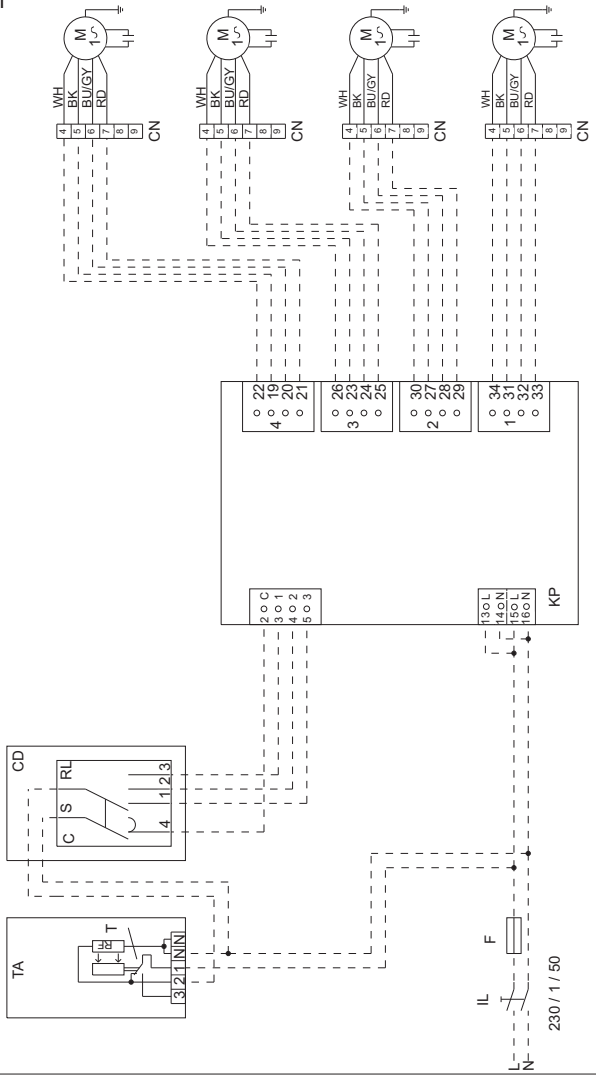






All copying, even partial, of this manual is strictly forbidden

## 10 WIRING DIAGRAMS

**Wiring diagram notes**

**WARNING! Turn off the power supply before beginning any wiring connections.**

The dashed lines connections must be carried out by the installer.

**Each fan-coil thermal-ventilating unit requires a switch (IL) on the feeder line with a distance of at least 3 mm between the opening contacts, and a suitable safety fuse (F).**

**10.6** **UTN** units with **TA** room thermostat with centralised mode selector and **CD**, **CDE** speed selectors:

**BK** = black, high speed
**BU** = blue, medium speed
**CD** = flush remote speed selection switch
**CDE** = remote speed selection switch
**CN** = faston connector
**F** = protection fuse, not supplied
**GNYE** = green/yellow, ground
**GY** = grey, medium speed
**IL** = mains switch, not supplied
**M** = fan motor
**RD** = red, low speed
**SF** = Centralised mode selector, not supplied
**TA** = room thermostat
**TC** = fan stop thermostat
**WH** = white, common

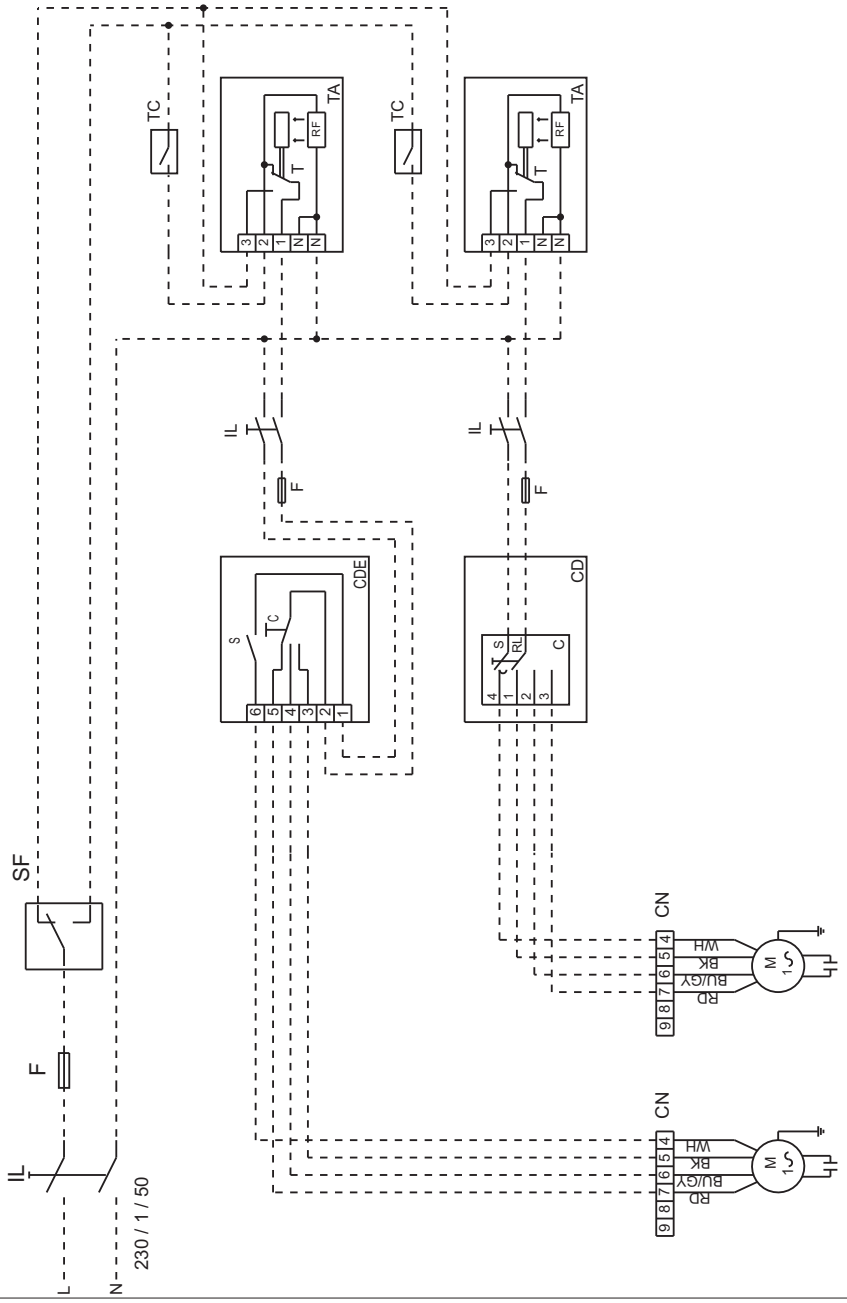




All copying, even partial, of this manual is strictly forbidden

## 10 WIRING DIAGRAMS

**Wiring diagram notes**

**WARNING! Turn off the power supply before beginning any wiring connections.**

The dashed lines connections must be carried out by the installer.

**Each fan-coil thermal-ventilating unit requires a switch (IL) on the feeder line with a distance of at least 3 mm between the opening contacts, and a suitable safety fuse (F).**

**10.7 UTN** units with **TD** wall mounted control with speed selector, electromechanical thermostat and summer winter selector:

**BK** = black, high speed
**BU** = blue, medium speed
**CN** = faston connector
**F** = protection fuse, not supplied
**GNYE** = green/yellow, ground
**GY** = grey, medium speed
**IL** = mains switch, not supplied
**M** = fan motor
**RD** = red, low speed
**SF** = centralised mode selector, not supplied
**TD** = wall mounted control with speed selector, electromechanical thermostat and summer winter selector
**WH** = white, common

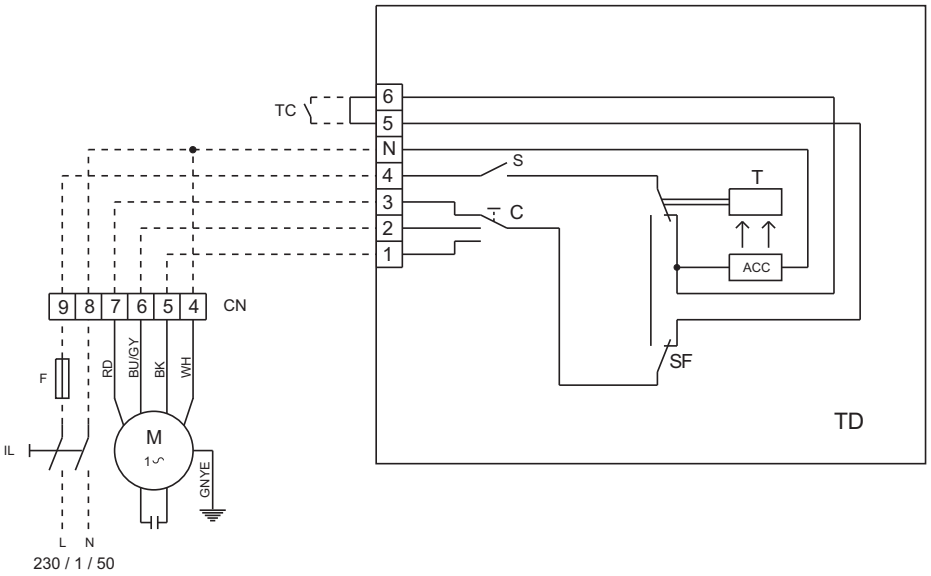


**10.8 UTN** units with **TDC** wall mounted control with speed selector and electromechanical thermostat:

**BK** = black, high speed
**BU** = blue, medium speed
**CN** = faston connector
**F** = protection fuse, not supplied
**GNYE** = green/yellow, ground
**GY** = grey, medium speed
**IL** = mains switch, not supplied
**M** = fan motor
**RD** = red, low speed
**SF** = centralised mode selector, not supplied
**TC** = fan stop motor
**TDC** = wall mounted control with speed selector and electromechanical thermostat
**WH** = white, common

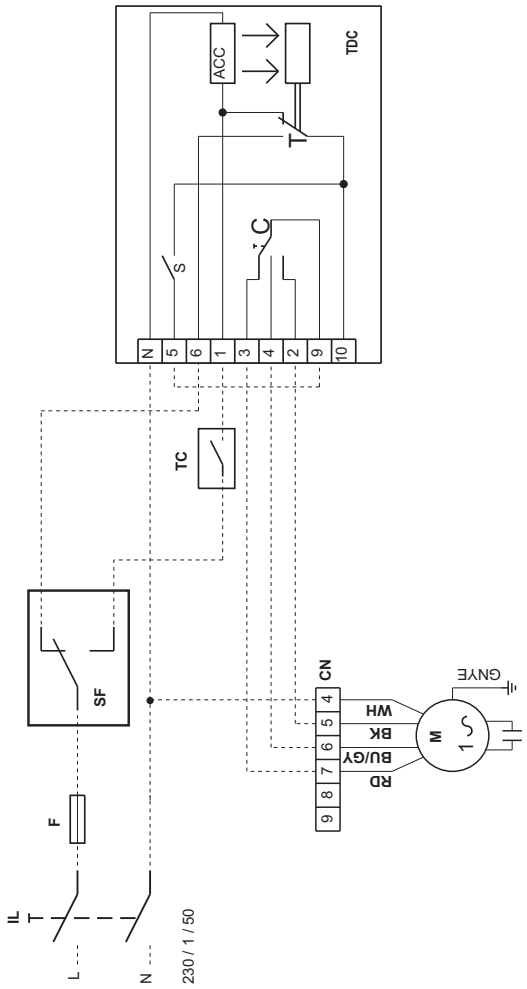






All copying, even partial, of this manual is strictly forbidden

## 10 WIRING DIAGRAMS

**Wiring diagram notes**
**WARNING! Turn off the power supply before beginning any wiring connections.**
The dashed lines connections must be carried out by the installer.

**Each fan-coil thermal-ventilating unit requires a switch (IL) on the feeder line with a distance of at least 3 mm between the opening contacts, and a suitable safety fuse (F).**

**10.9** **UTN** units with **TD4T** wall mounted control with speed selector, electromechanical thermostat and summer winter selector (heating/cooling) for 2/4 pipe systems with valves:

**BK** = black, high speed
**BU** = blue, medium speed
**CN** = faston connector
**F** = protection fuse, not supplied
**GNYE** = green/yellow, ground
**GY** = grey, medium speed
**IL** = mains switch, not supplied
**M** = fan motor
**RD** = red, low speed
**SF** = centralised mode selector, not supplied
**TD4T** = wall mounted control with speed selector, electromechanical thermostat and summer winter selector for 2/4 pipe systems with valves.
**VK-C** = on/off valve for cooling circuit
**VK-H** = on/off valve for heating circuit
**WH** = white, common

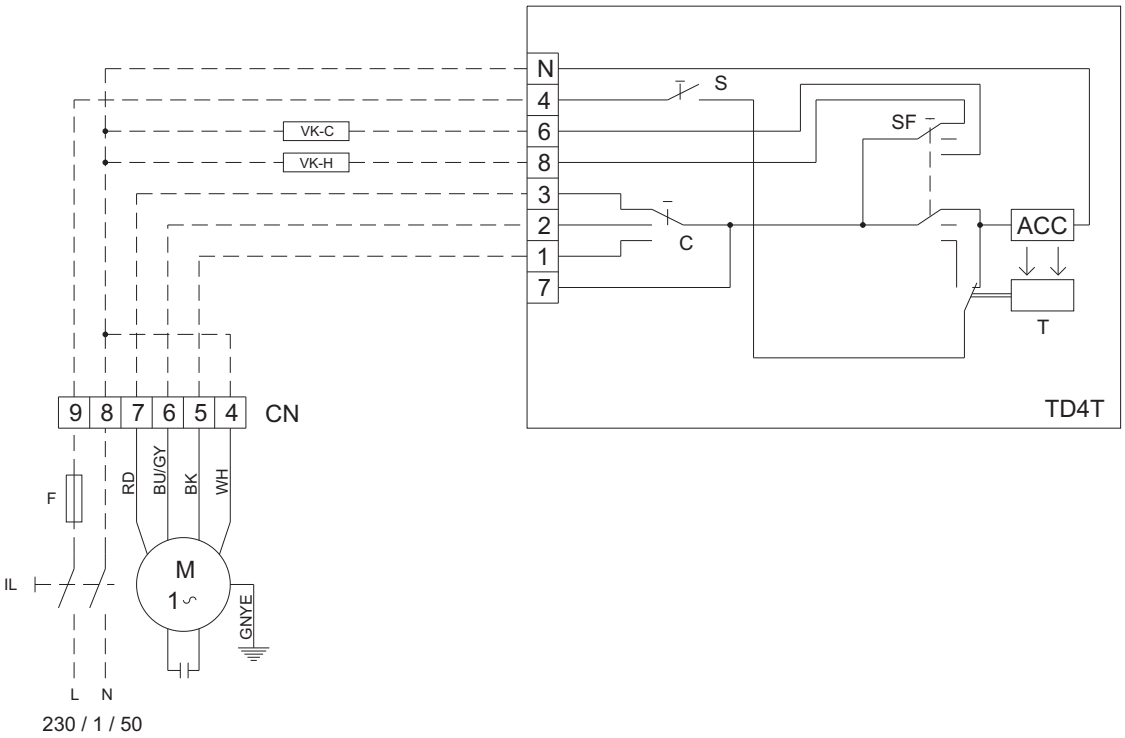



All copying, even partial, of this manual is strictly forbidden

## 11 MOTORS ELECTRICAL DATA

The following table describes the characteristics of the motors at available working conditions.

**Legend:**
**Vr** Operation speed
**$P_{ASS}$** Power input
**$I_{ASS}$** Operation current

| | Vr | $I_{ass}$ (A) | $P_{ass}$ (W) |
|---|---|---|---|
| **UTN06-06A** | high | 0,820 | 188 |
| | med | 0,550 | 122 |
| | low | 0,400 | 84 |
| **UTN08-08A** | high | 1,210 | 265 |
| | med | 0,810 | 185 |
| | low | 0,700 | 135 |
| **UTN12-12A** | high | 2,100 | 460 |
| | med | 1,600 | 345 |
| | low | 1,350 | 385 |
| **UTN16-16A** | high | 2,500 | 505 |
| | med | 1,800 | 380 |
| | low | 1,400 | 290 |
| **UTN22-22A** | high | 3,500 | 750 |
| | med | 2,350 | 535 |
| | low | 1,800 | 370 |
| **UTN30-30A** | high | 5,600 | 1300 |
| | med | 4,600 | 1090 |
| | low | 3,800 | 870 |
| **UTN40-40A** | high | 5,556 | 1150 |
| | med | 3,961 | 820 |
| | low | 3,140 | 650 |

## 12 ACCESSORIES

**CD - Flush wall-mounted speed selector**

Flush wall-mounted control panel is provided with a 4 positions (3speed + stop) rotation selector.
The CD control panel allows the ON/OFF and fan speed selection of the high pressure fan coil unit.

**CDE - wall mounted speed selector**

Wall mounted control panel is provided with a 3 positions (3 speed ) and switch ON/OFF .
The CDE control panel allows the ON/OFF and fan speed selection of the high pressure fan coil unit.

**TD - Wall mounted control with speed selector, thermostat and summer-winter selector**

Wall mounted control panel complete with fan speed selector, electromechanical thermostat and cooling / heating mode selector.
Fan speed control, regulation of the room temperature and cooling heating mode selection:
- manual setting of the fan speed;
- room temperature regulation both in cooling / heating mode, by means of fan start / stop, at a manually set temperature.

**TDC - Wall mounted control with speed selector and thermostat**

Wall mounted control panel complete with fan speed selector, electromechanical thermostat and cooling / heating mode selector.
Fan speed control, regulation of the room temperature and cooling / heating mode selection:
- manual setting of the fan speed;
- room temperature regulation both in cooling / heating mode, by means of fan start/stop, at a manually set temperature.

**TD4T - Wall mounted control with speed selector, thermostat and summer-winter selector, for 2/4 pipe system with valves**

Wall mounted control panel provided with fan speed selector, electromechanical thermostat, and cooling / heating mode selector; if installed it controls regulating valves.
Fan speed control and regulation of the room temperature:
- manual setting of the operation fan speed;
- regulation of the room temperature for 2 and 4 pipe systems, both in heating and cooling mode, by means of fan start/stop at a manually set temperature and by means of opening and closing of the regulating valve.


All copying, even partial, of this manual is strictly forbidden

## 12 ACCESSORIES

**MYCOMFORT BASE - GALLETTI wall-mounted microprocessor control, model MYCOMFORT BASE, having the following main features:**

- Room air temperature reading and adjustment
- Water temperature reading (water sensor as an optional)
- Manual and automatic adjustment of fan speed
- Manual and automatic switching of heating and cooling mode depending on the water temperature within the heat exchanger or on the room temperature, with a neutral zone that can be selected in the range from 2° to 5°C.

The controller is equipped with a large display (3") to show and set all the functions of the unit.
Using the installation kit available, myComfort can be mounted on the unit

**MYCOMFORT MEDIUM - GALLETTI wall-mounted microprocessor control, model MYCOMFORT MEDIUM, having the following main features :**

- Room air temperature reading and adjustment
- Reading and adjustment of room humidity
- Water temperature reading (water sensor as an optional)
- Manual and automatic adjustment of fan speed
- Manual and automatic switching of heating and cooling mode depending on the water temperature within the heat exchanger or on the room temperature, with a neutral zone that can be selected in the range from 2° to 5°C.
- Serial port for Bus connection

The controller is equipped with a large display (3") to show and set all the functions of the unit.
Using the installation kit available, myComfort can be mounted on the unit

**MYCOMFORT LARGE- GALLETTI wall-mounted microprocessor control, model MYCOMFORT LARGE, having the following main features :**

- Room air temperature reading and adjustment
- Reading and adjustment of room humidity
- Water temperature reading (water sensor as an optional)
- Manual and automatic adjustment of fan speed
- Manual and automatic switching of heating and cooling mode depending on the water temperature within the heat exchanger or on the room temperature, with a neutral zone that can be selected in the range from 2° to 5°C.
- Clock and hourly timer-programmed operation
- 2 Analogue outputs for controlling modulating devices 0-10V
- 2 Digital outputs for controlling (On/Off) external devices (no-voltage contacts)
- Serial port for Bus connection

The controller is equipped with a large display (3") to show and set all the functions of the unit.
Using the installation kit available, myComfort can be mounted on the unit

**SW - Water temperature sensor for microprocessor controls model MYCOMFORT and LED503**
Connected directly to the microprocessor control panel, this probe measures the water temperature inside the heat exchanger.
If the temperature registered is lower than 17°C the unit works in cooling mode and the temperature range of the control panel will be referred to the cooling mode (19 / 31°C); if the temperature registered is higher than 37°C the unit works in heating mode and the temperature range of the control panel will be referred to the heating mode (14 / 26°C).
If the temperature registered is between 17°C e 37°C the control panel will disable the unit operation.

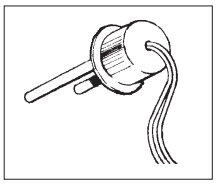

**TC - Fan stop thermostat: elecromechanical thermostat for minimum water temperature during heating**
Fan stop thermostat with automatic resetting, it stops the fan motor assembly when the water temperature in the heat exchanger decreases under the set value (42°C).
Usefull only in the heating mode for installation on the finned pack of the heat exchanger.

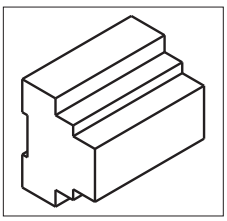

**IPM - Power interface for the connections to the control panels MYCOMFORT and LED503**
The IPM power board permits to use MYCOMFORT and LED503 microprocessor-based control panels on the whole range of UTN air handling units, even for models with current consumation greayer than 1A.
The capacity of the IPM contacts is 16A, IP30 rating.
The use of the IPM power board matched with the microprocessor controls is:
- compulsory for UTN 30, UTN 30A, UTN 40, UTN 40A.

**SU - Humidity sensor for on-board microprocessor controls model MYCOMFORT MEDIUM and MYCOMFORT LARGE.**

**LED503 - Recess wall-mounted microprocessor control**
The proposed microprocessor control panels for Galletti indoor units is completed by the LED503 command with LED display that is designed for recess wall mounting.

**CONTROLLER**
The control software developed by the Galletti Software Dept., features:
- Manual fan speed selection;
- Automatic selection of fan speed according to the difference between the set temperature and the room air temperature;
- Manual selection of heating/cooling operating mode;
- Automatic selection of heating/cooling operating mode;
- Control of 1 or 2 ON/OFF valves;
- Control of additional heating element;
- On board timer function to detect the actual ambient temperature;
- Reading of air ambient temperature, set point, fan speed and mode selection on the LED display.


All copying, even partial, of this manual is strictly forbidden

## 12 ACCESSORIES

**TA - Wall mounted room thermostat**

Room thermostat for wall installation.
Automatic regulation of the room temperature:
- only in the heating mode working on the fan motor assembly and on the regulating valve, if installed (ON/OFF operation);
- only in the cooling mode working on the fan motor assembly and on the regulating valve, if installed (ON/OFF operation);
- both in cooling and heating mode, with remote mode selection working on the fan motor assembly and on the regulating valve, if installed (ON/OFF operation).

**TA2 - Wall mounted room thermostat with summer/ winter selector**

Wall mounted room thermostat with cooling / heating mode selector.
Automatic regulation of the room temperarure both in heating and cooling mode, working on the fan motor assembly and on the regulating valve if installed (ON/OFF operating).

**CSD - Wall mounted control for proportional opening and closing of the PA90 motorized louver**

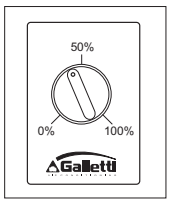


Designed for wall installation it allows the proportional opening and closing from 0 to 100% of the PA90 outdoor air intake motorized louver

**MAF / MAFO - Air intake modules with filter**

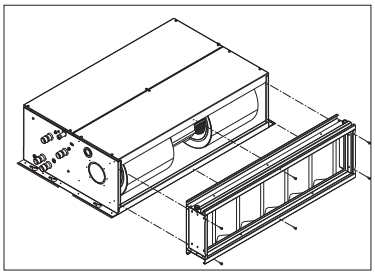

Made of galvanized steel sheet, these modules permit to filter the air sucked up by the unit and also to connect the unit to the intake channeling.
2 version are proposed depending on the guaranteed filtering degree:
MAF: air intake module with flat filter made of acrylic material, self-extinguishing in class 1, with filtering class G2.
MAFO: air intake module with corrugated filter made of acrylic fiber, self-extinguishing in class 1, with filtering EU4.

**PCOC - Connecting panel to rectangular ducts**

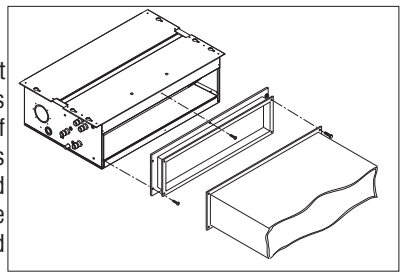

Manufactured in galvanised sheet steel, the PCOC connection panels are used for the connection of rectangular ducts with flanges and with other flanged accessories. They can be installed on both the intake and delivery line.
They are made up of a rectangular panel that is to be secured to the machine (or to another accessory with similar drilling, for example, MAF, MAFO, RE etc..) coupled to a flanged sleeve that represents the starting point for rectangular ducts of the type commonly used in distribution plants.

**PCOF - Connecting panel to flexible ducts**

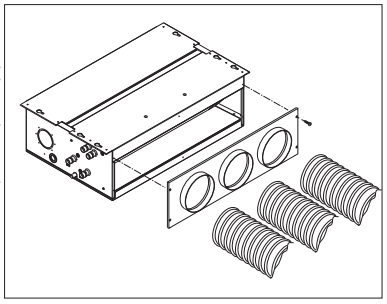

Manufactured in galvanised sheet steel, the PCOF connection panels are used to connect to air distribution plants achieved by means of hoses or to other dedicated accessories. They can be installed on both the intake and delivery line (in this case the hose should be insulated).
They are made up of a rectangular panel that is to be secured to the machine or to another accessory with similar drilling (i.e. MAF, MAFO, RE etc..) complete with circular collars (Ø 200 mm) that represent the starting point for the hoses of the type commonly used in distribution plants.

| Model UTN | 06-06A | 08-08A | 12-12A | 16-16A | 22-22A | 30-30A |
|---|---|---|---|---|---|---|
| n° of holes | 2 | 2 | 3 | 4 | 4 | 5 |

**V - M - R 3-way valve, on-off actuator and hydraulic connections kit**

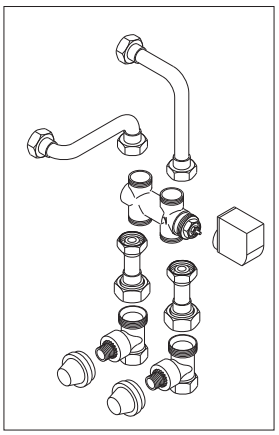

IThe system allows the regulation of the ambient temperature by stopping the water flow into the heat exchanger.
Available for 2 pipe and 4 pipe systems, the kit is made of the components below indicated:
Valve body (V): 3-way with in-built by-pass (4 connections):
- 3/4” for the models UTN 6, UTN 6A, UTN 8, UTN 8A
- 1” for the models UTN 12, UTN 12A, UTN 16, UTN 16A
Actuator (M): normally closed, electrothermal type, 230V single phase, with ON-OFF operation, it works directly on the valve shutter.
Hydraulic connections kit (R): made of copper tubes and brass connections, complete with balancing valve, is different according to the models (standard coil or additional coil in case of 4 pipe systems) and for the unit water connection side.
The hydraulic connections kit is not available for the UTN22 - 22A and UTN30 - 30A units.

**VRCV / VRCH - Auxiliary trays for collecting condensate**

Auxiliary trays for collecting condensate, used for collecting any condensate that might form on the adjusting valves, the hydraulic unions and the holdfasts during the cooling operating mode.
The trays are made of galvanized metal sheet, with condensate discharge pipe (ϕ17 mm) setup for being connected to a flexible rubber tube, like that which has been envisaged for the condensate discharge trays of the basic unit.
They are available for:
UTN units installed vertically, VRCV.
UTN units installed horizontally, VRCH.

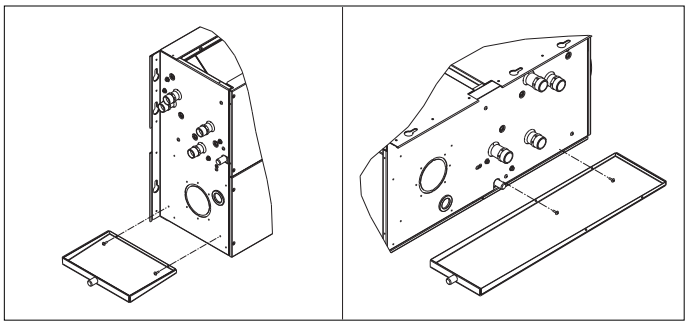


All copying, even partial, of this manual is strictly forbidden

## 12 ACCESSORIES

**KSC - Condensate removal kit**

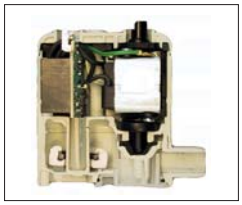

This device allows to overcome displacements in the condensate drain.
The pump can drain water up to 8 l/h and it is completed by a non return valve on the discharge side.

**BP - Kit batterie di post riscaldamento**

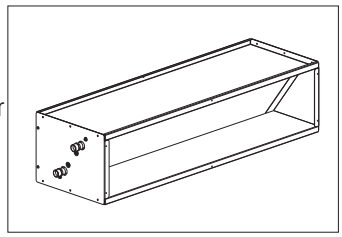

BP 1 or 2 row reheating exchangers are designed for installation on the air outlet of the UTN air conditioning and thermal ventilating units.
NOTE:
The BP module has holes like those on the machine air intake, on the extremity turned toward the air outflow ducts. This allows you to attach all the accessories that can be directly applied on the machine (PCOC, PCOF, GAT, etc…).

**RE - Supplementary heating elements**

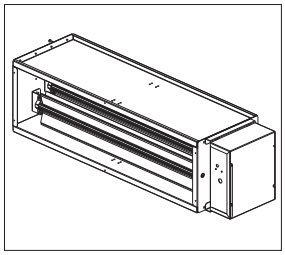

Useful as heating integration to the hot water system, the RE kit is made of an electric heater with safety thermostat (automatic and manual resetting) and power relay.
The RE electric heater kit has to be matched with the MICROPRO-D control panel and with the IPM power board.

**PA90 - Outdoor air inlet motorized louver**

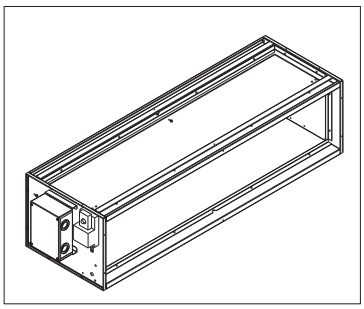

The outdoor air inlet motorized louvre is intended for replacing the air in the room directly from the air-handling unit. The amount of outdoor air that will be let into the room, after having been filtered and treated thermally, may be regulated proportionally from 0 to 100% by means of a servomotor controlled by a rotary potentiometer that is inside the specific CSD control, which is designed for flush wall-mounting installations.
Kit PA90, as shown in figure (1), essentially comprises the following components:
A) Outdoor air inlet louvre made of galvanized steel sheet and setup for being connected to the machine, at one end, and to the other required accessories.
B) Servomotor connected directly to the louvre's baffle, with a protection rating of IP54 and power supply of ~ 24V. The louvre may be opened or closed automatically at the signal of the external auxiliary contacts (not supplied) such as antifreeze thermostats, timers, etc., with the possibility of connecting multi-servomotors in parallel to an individual opening-closing control.
C) 230V - 24V voltage transformer, complete with support terminal strip housed inside the specific electrical box, which functions as a mechanical protection for preventing the access to the connecting terminal strip and to the transformer itself.
D) Self-threading fixing screws.

**GA / GAT - Vibration dampers**

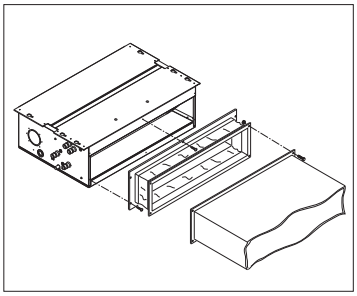

Manufactured in galvanized sheet steel, the GA/GAT connection panels are used to connect to rectangular ducts equipped with flanges and other flanged accessories.
They are made up of a rectangular panel that is to be secured to the machine or to another accessory with similar drilling (i.e. MAF, MAFO, RE etc...) coupled by means of a flexible bellow to a flanged sleeve that rapresents the starting point for rectangular ducts of the type commonly used in distribution plants.
If the vibration damping joint is used together with the electrical heating elements module (accessory RE) a GAT joint made of heat-resistant silicone material is to be fitted on the delivery line.

**TFA - Not insulated flexible ducts**

Uninsulated flexible duct for the connections to the air distribution with $\phi$ 200 mm diameter, supplied in 6 m lenght undivisible.

**TFM - Insulated flexible ducts**

Insulated flexible duct for the connections to the air distribution with $\phi$ 200 mm diameter, supplied in 6 m lenght undivisible. The insulation of the duct is optained by means of fiberglass, thickness 25 mm with 16 Kg/m$^3$ density.

**TP - Plastic cap**

Plastic cap $\phi$ 200 mm for the closing on the PCOF, of the air outlet not used.

**CA / CAF - Air inlet plenum box**

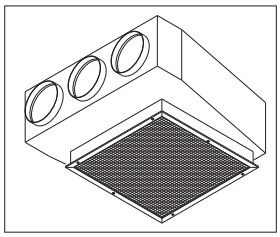

Intake Plenum box in galvanised sheet metal complete with circular collars (Ø 200 mm) for the connection, by means of hoses and intake grids with fixed fins, to pocket type structures, to increase the free air flow cross section.
Sized to be adaptable to the modular structure of the ceiling panels, they are equipped with 2 or 3 circular collars so that they can be connected, following their suitable combination, to all the heater fans of the UTN range. The CA version is equipped with just the grid alone whereas the CAF version is also equipped with a flat filter in acrylic material, with filtering rating G2, housed in the standard frame. The filter of this second type of intake box can be serviced (cleaned) on a periodic basis without having to access the unit fitted behind the ceiling panels or in a service room.

**GM - Alluminium air outlet grille**

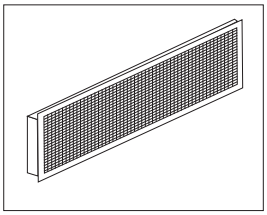

Air delivery grids with double row of adjustable fins in anodised aluminium, equipped with galvanised sheet metal frame that is used to wall-mount the grids or to fit them directly on the delivery head of the machine.
The galvanised sheet metal frame is drilled at one end so that it can be secured directly to the delivery head of the heater fan (or to accessories such as the additional RE electrical module).

**GR - Alluminium air inlet grille**

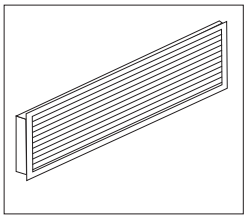

Air intake grids with single row of fins in anodised aluminium, equipped with galvanised sheet metal frame that is used to wall-mount the grids or to fit them directly on the intake head of the machine.
The galvanised sheet metal frame is drilled at one end so that it can be secured directly to the intake head of the heater fan (or to accessories such as the MAF and MAFO filtering units).


All copying, even partial, of this manual is strictly forbidden

## 13 MAINTENANCE

The maintenance operations for the UTN air conditioning and hot-air heating units are limited to the periodic cleaning of the air filter (provided on MA/F and MA/FO accessories) and the heat exchanger, and the checking of the working efficiency of the condensate discharge.
Only skilled personnel may perform the aforesaid maintenance.
Pay utmost attention during the maintenance operations: accidentally coming into touch with some of the metallic parts might cause injuries therefore wear safety work gloves.
Every time the units are started after long dwell times, make sure that air is NOT present inside the heat exchanger.
The motor is maintenance-free since it is equipped with self-lubricating bearings.
**For safety reasons, before performing any maintenance or cleaning operations, turn off the equipment and cut voltage by turning the line switch.**


All copying, even partial, of this manual is strictly forbidden

Galletti
AIR CONDITIONING

40010 Bentivoglio (BO)
Via Romagnoli, 12/a
Tel. 051/8908111
Fax 051/8908122
www.galletti.it

Company ISO 9001/2000 and OHSAS 18001 certified